SAE-300® HE

For use with machines having Code Numbers:
SAE-300® HE: 11907, 12683

SERVICE MANUAL

SVM290 | Issue Date 18-Jul

THE LINCOLN ELECTRIC COMPANY
22801 St. Clair Avenue • Cleveland, OH • 44117-1199 • U.S.A.
Phone: +1.216.481.8100 • www.lincolnelectric.com

THANK YOU FOR SELECTING A QUALITY PRODUCT BY LINCOLN ELECTRIC.

PLEASE EXAMINE CARTON AND EQUIPMENT FOR DAMAGE IMMEDIATELY

When this equipment is shipped, title passes to the purchaser upon receipt by the carrier. Consequently, claims for material damaged in shipment must be made by the purchaser against the transportation company at the time the shipment is received.

SAFETY DEPENDS ON YOU

Lincoln arc welding and cutting equipment is designed and built with safety in mind. However, your overall safety can be increased by proper installation ... and thoughtful operation on your part. **DO NOT INSTALL, OPERATE OR REPAIR THIS EQUIPMENT WITHOUT READING THIS MANUAL AND THE SAFETY PRECAUTIONS CONTAINED THROUGHOUT.** And, most importantly, think before you act and be careful.

⚠ WARNING

This statement appears where the information must be followed exactly to avoid serious personal injury or loss of life.

⚠ CAUTION

This statement appears where the information must be followed to avoid minor personal injury or damage to this equipment.

KEEP YOUR HEAD OUT OF THE FUMES.

DON'T get too close to the arc. Use corrective lenses if necessary to stay a reasonable distance away from the arc.

READ and obey the Safety Data Sheet (SDS) and the warning label that appears on all containers of welding materials.

USE ENOUGH VENTILATION or exhaust at the arc, or both, to keep the fumes and gases from your breathing zone and the general area.

IN A LARGE ROOM OR OUTDOORS, natural ventilation may be adequate if you keep your head out of the fumes (See below).

USE NATURAL DRAFTS or fans to keep the fumes away from your face.

If you develop unusual symptoms, see your supervisor. Perhaps the welding atmosphere and ventilation system should be checked.

WEAR CORRECT EYE, EAR & BODY PROTECTION

PROTECT your eyes and face with welding helmet properly fitted and with proper grade of filter plate (See ANSI Z49.1).

PROTECT your body from welding spatter and arc flash with protective clothing including woolen clothing, flame-proof apron and gloves, leather leggings, and high boots.

PROTECT others from splatter, flash, and glare with protective screens or barriers.

IN SOME AREAS, protection from noise may be appropriate.

BE SURE protective equipment is in good condition.

Also, wear safety glasses in work area **AT ALL TIMES.**

SPECIAL SITUATIONS

DO NOT WELD OR CUT containers or materials which previously had been in contact with hazardous substances unless they are properly cleaned. This is extremely dangerous.

DO NOT WELD OR CUT painted or plated parts unless special precautions with ventilation have been taken. They can release highly toxic fumes or gases.

Additional precautionary measures

PROTECT compressed gas cylinders from excessive heat, mechanical shocks, and arcs; fasten cylinders so they cannot fall.

BE SURE cylinders are never grounded or part of an electrical circuit.

REMOVE all potential fire hazards from welding area.

ALWAYS HAVE FIRE FIGHTING EQUIPMENT READY FOR IMMEDIATE USE AND KNOW HOW TO USE IT.

SECTION A: WARNINGS

CALIFORNIA PROPOSITION 65 WARNINGS

Diesel Engines

Diesel engine exhaust and some of its constituents are known to the State of California to cause cancer, birth defects, and other reproductive harm.

Gasoline Engines

The engine exhaust from this product contains chemicals known to the State of California to cause cancer, birth defects, or other reproductive harm.

ARC WELDING CAN BE HAZARDOUS. PROTECT YOURSELF AND OTHERS FROM POSSIBLE SERIOUS INJURY OR DEATH. KEEP CHILDREN AWAY. PACEMAKER WEARERS SHOULD CONSULT WITH THEIR DOCTOR BEFORE OPERATING.

Read and understand the following safety highlights. For additional safety information, it is strongly recommended that you purchase a copy of “Safety in Welding & Cutting - ANSI Standard Z49.1” from the American Welding Society, P.O. Box 351040, Miami, Florida 33135 or CSA Standard W117.2-1974. A Free copy of “Arc Welding Safety” booklet E205 is available from the Lincoln Electric Company, 22801 St. Clair Avenue, Cleveland, Ohio 44117-1199.

BE SURE THAT ALL INSTALLATION, OPERATION, MAINTENANCE AND REPAIR PROCEDURES ARE PERFORMED ONLY BY QUALIFIED INDIVIDUALS.

FOR ENGINE POWERED EQUIPMENT.

1.a. Turn the engine off before troubleshooting and maintenance work unless the maintenance work requires it to be running.

1.b. Operate engines in open, well-ventilated areas or vent the engine exhaust fumes outdoors.

1.c. Do not add the fuel near an open flame welding arc or when the engine is running. Stop the engine and allow it to cool before refueling to prevent spilled fuel from vaporizing on contact with hot engine parts and igniting. Do not spill fuel when filling tank. If fuel is spilled, wipe it up and do not start engine until fumes have been eliminated.

1.d. Keep all equipment safety guards, covers and devices in position and in good repair. Keep hands, hair, clothing and tools away from V-belts, gears, fans and all other moving parts when starting, operating or repairing equipment.

1.e. In some cases it may be necessary to remove safety guards to perform required maintenance. Remove guards only when necessary and replace them when the maintenance requiring their removal is complete. Always use the greatest care when working near moving parts.

1.f. Do not put your hands near the engine fan. Do not attempt to override the governor or idler by pushing on the throttle control rods while the engine is running.

1.g. To prevent accidentally starting gasoline engines while turning the engine or welding generator during maintenance work, disconnect the spark plug wires, distributor cap or magneto wire as appropriate.

1.h. To avoid scalding, do not remove the radiator pressure cap when the engine is hot.

ELECTRIC AND MAGNETIC FIELDS MAY BE DANGEROUS

2.a. Electric current flowing through any conductor causes localized Electric and Magnetic Fields (EMF). Welding current creates EMF fields around welding cables and welding machines

2.b. EMF fields may interfere with some pacemakers, and welders having a pacemaker should consult their physician before welding.

2.c. Exposure to EMF fields in welding may have other health effects which are now not known.

2.d. All welders should use the following procedures in order to minimize exposure to EMF fields from the welding circuit:

- 2.d.1. Route the electrode and work cables together - Secure them with tape when possible.
- 2.d.2. Never coil the electrode lead around your body.
- 2.d.3. Do not place your body between the electrode and work cables. If the electrode cable is on your right side, the work cable should also be on your right side.
- 2.d.4. Connect the work cable to the workpiece as close as possible to the area being welded.
- 2.d.5. Do not work next to welding power source.

ELECTRIC SHOCK CAN KILL.

3.a. The electrode and work (or ground) circuits are electrically "hot" when the welder is on. Do not touch these "hot" parts with your bare skin or wet clothing. Wear dry, hole-free gloves to insulate hands.

3.b. Insulate yourself from work and ground using dry insulation. Make certain the insulation is large enough to cover your full area of physical contact with work and ground.

In addition to the normal safety precautions, if welding must be performed under electrically hazardous conditions (in damp locations or while wearing wet clothing; on metal structures such as floors, gratings or scaffolds; when in cramped positions such as sitting, kneeling or lying, if there is a high risk of unavoidable or accidental contact with the workpiece or ground) use the following equipment:

- Semiautomatic DC Constant Voltage (Wire) Welder.
- DC Manual (Stick) Welder.
- AC Welder with Reduced Voltage Control.

3.c. In semiautomatic or automatic wire welding, the electrode, electrode reel, welding head, nozzle or semiautomatic welding gun are also electrically "hot".

3.d. Always be sure the work cable makes a good electrical connection with the metal being welded. The connection should be as close as possible to the area being welded.

3.e. Ground the work or metal to be welded to a good electrical (earth) ground.

3.f. Maintain the electrode holder, work clamp, welding cable and welding machine in good, safe operating condition. Replace damaged insulation.

3.g. Never dip the electrode in water for cooling.

3.h. Never simultaneously touch electrically "hot" parts of electrode holders connected to two welders because voltage between the two can be the total of the open circuit voltage of both welders.

3.i. When working above floor level, use a safety belt to protect yourself from a fall should you get a shock.

3.j. Also see Items 6.c. and 8.

ARC RAYS CAN BURN.

4.a. Use a shield with the proper filter and cover plates to protect your eyes from sparks and the rays of the arc when welding or observing open arc welding. Headshield and filter lens should conform to ANSI Z87. I standards.

4.b. Use suitable clothing made from durable flame-resistant material to protect your skin and that of your helpers from the arc rays.

4.c. Protect other nearby personnel with suitable, non-flammable screening and/or warn them not to watch the arc nor expose themselves to the arc rays or to hot spatter or metal.

FUMES AND GASES CAN BE DANGEROUS.

5.a. Welding may produce fumes and gases hazardous to health. Avoid breathing these fumes and gases. When welding, keep your head out of the fume. Use enough ventilation and/or exhaust at the arc to keep fumes and gases away from the breathing zone. **When welding hardfacing (see instructions on container or SDS) or on lead or cadmium plated steel and other metals or coatings which produce highly toxic fumes, keep exposure as low as possible and within applicable OSHA PEL and ACGIH TLV limits using local exhaust or mechanical ventilation unless exposure assessments indicate otherwise. In confined spaces or in some circumstances, outdoors, a respirator may also be required. Additional precautions are also required when welding on galvanized steel.**

5. b. The operation of welding fume control equipment is affected by various factors including proper use and positioning of the equipment, maintenance of the equipment and the specific welding procedure and application involved. Worker exposure level should be checked upon installation and periodically thereafter to be certain it is within applicable OSHA PEL and ACGIH TLV limits.

5.c. Do not weld in locations near chlorinated hydrocarbon vapors coming from degreasing, cleaning or spraying operations. The heat and rays of the arc can react with solvent vapors to form phosgene, a highly toxic gas, and other irritating products.

5.d. Shielding gases used for arc welding can displace air and cause injury or death. Always use enough ventilation, especially in confined areas, to insure breathing air is safe.

5.e. Read and understand the manufacturer's instructions for this equipment and the consumables to be used, including the Safety Data Sheet (SDS) and follow your employer's safety practices. SDS forms are available from your welding distributor or from the manufacturer.

5.f. Also see item 1.b.

WELDING AND CUTTING SPARKS CAN CAUSE FIRE OR EXPLOSION.

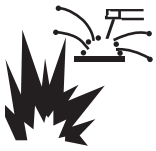

6.a. Remove fire hazards from the welding area. If this is not possible, cover them to prevent the welding sparks from starting a fire. Remember that welding sparks and hot materials from welding can easily go through small cracks and openings to adjacent areas. Avoid welding near hydraulic lines. Have a fire extinguisher readily available.

6.b. Where compressed gases are to be used at the job site, special precautions should be used to prevent hazardous situations. Refer to “Safety in Welding and Cutting” (ANSI Standard Z49.1) and the operating information for the equipment being used.

6.c. When not welding, make certain no part of the electrode circuit is touching the work or ground. Accidental contact can cause overheating and create a fire hazard.

6.d. Do not heat, cut or weld tanks, drums or containers until the proper steps have been taken to insure that such procedures will not cause flammable or toxic vapors from substances inside. They can cause an explosion even though they have been “cleaned”. For information, purchase “Recommended Safe Practices for the Preparation for Welding and Cutting of Containers and Piping That Have Held Hazardous Substances”, AWS F4.1 from the American Welding Society (see address above).

6.e. Vent hollow castings or containers before heating, cutting or welding. They may explode.

6.f. Sparks and spatter are thrown from the welding arc. Wear oil free protective garments such as leather gloves, heavy shirt, cuffless trousers, high shoes and a cap over your hair. Wear ear plugs when welding out of position or in confined places. Always wear safety glasses with side shields when in a welding area.

6.g. Connect the work cable to the work as close to the welding area as practical. Work cables connected to the building framework or other locations away from the welding area increase the possibility of the welding current passing through lifting chains, crane cables or other alternate circuits. This can create fire hazards or overheat lifting chains or cables until they fail.

6.h. Also see item 1.c.

6.I. Read and follow NFPA 51B “Standard for Fire Prevention During Welding, Cutting and Other Hot Work”, available from NFPA, 1 Batterymarch Park, PO box 9101, Quincy, MA 022690-9101.

6.j. Do not use a welding power source for pipe thawing.

CYLINDER MAY EXPLODE IF DAMAGED.

7.a. Use only compressed gas cylinders containing the correct shielding gas for the process used and properly operating regulators designed for the gas and pressure used. All hoses, fittings, etc. should be suitable for the application and maintained in good condition.

7.b. Always keep cylinders in an upright position securely chained to an undercarriage or fixed support.

7.c. Cylinders should be located:

- Away from areas where they may be struck or subjected to physical damage.
- A safe distance from arc welding or cutting operations and any other source of heat, sparks, or flame.

7.d. Never allow the electrode, electrode holder or any other electrically “hot” parts to touch a cylinder.

7.e. Keep your head and face away from the cylinder valve outlet when opening the cylinder valve.

7.f. Valve protection caps should always be in place and hand tight except when the cylinder is in use or connected for use.

7.g. Read and follow the instructions on compressed gas cylinders, associated equipment, and CGA publication P-I, “Precautions for Safe Handling of Compressed Gases in Cylinders,” available from the Compressed Gas Association, 14501 George Carter Way Chantilly, VA 20151.

FOR ELECTRICALLY POWERED EQUIPMENT.

8.a. Turn off input power using the disconnect switch at the fuse box before working on the equipment.

8.b. Install equipment in accordance with the U.S. National Electrical Code, all local codes and the manufacturer’s recommendations.

8.c. Ground the equipment in accordance with the U.S. National Electrical Code and the manufacturer’s recommendations.

Refer to http://www.lincolnelectric.com/safety for additional safety information.

SAE-300® HE

Service Manual

Last update: 2018/07/01

Theory of Operation

Figure F.1 – Block Diagram

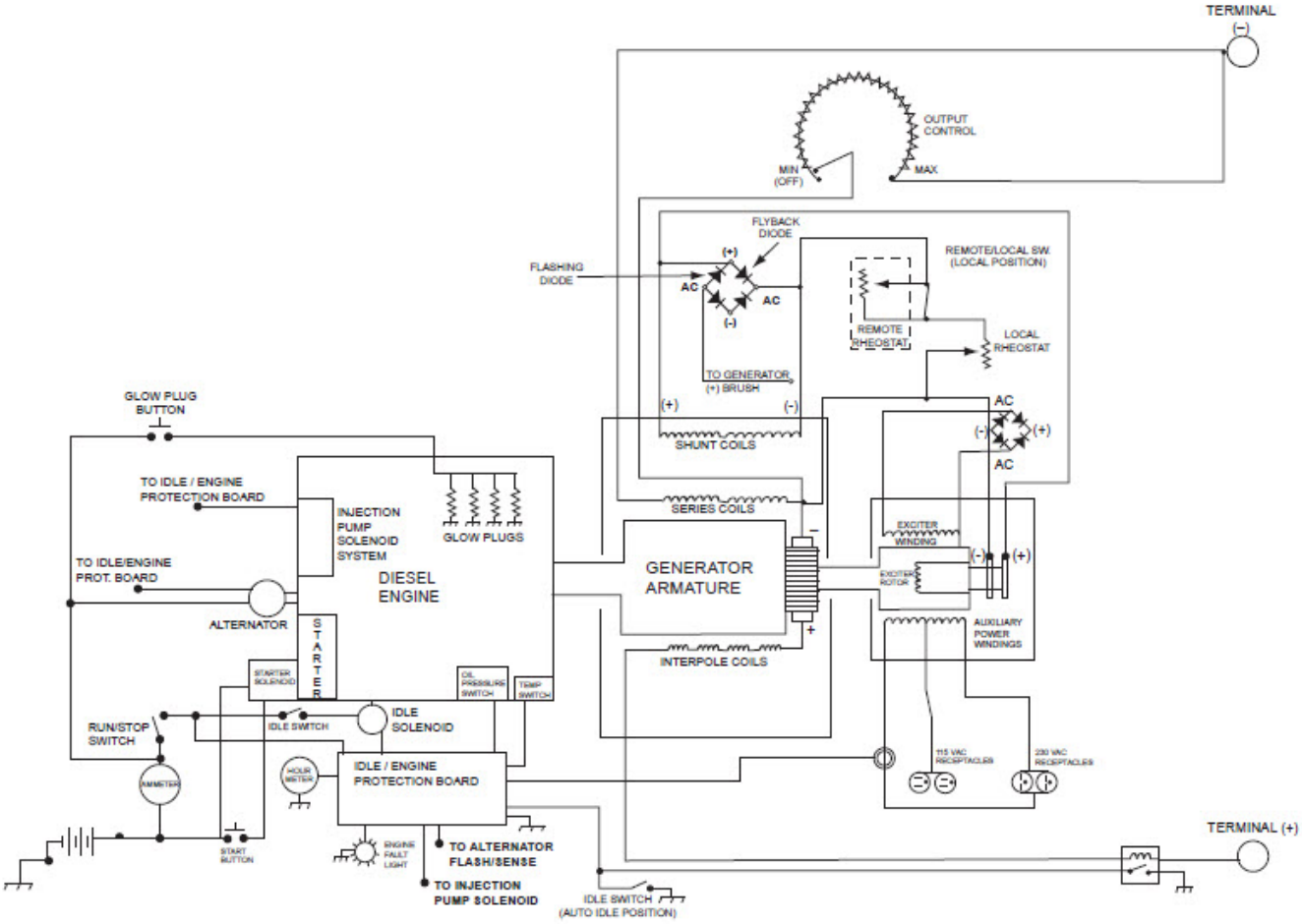

ENGINE STARTING AND PROTECTION

FIGURE F.2 – ENGINE START AND PROTECTION

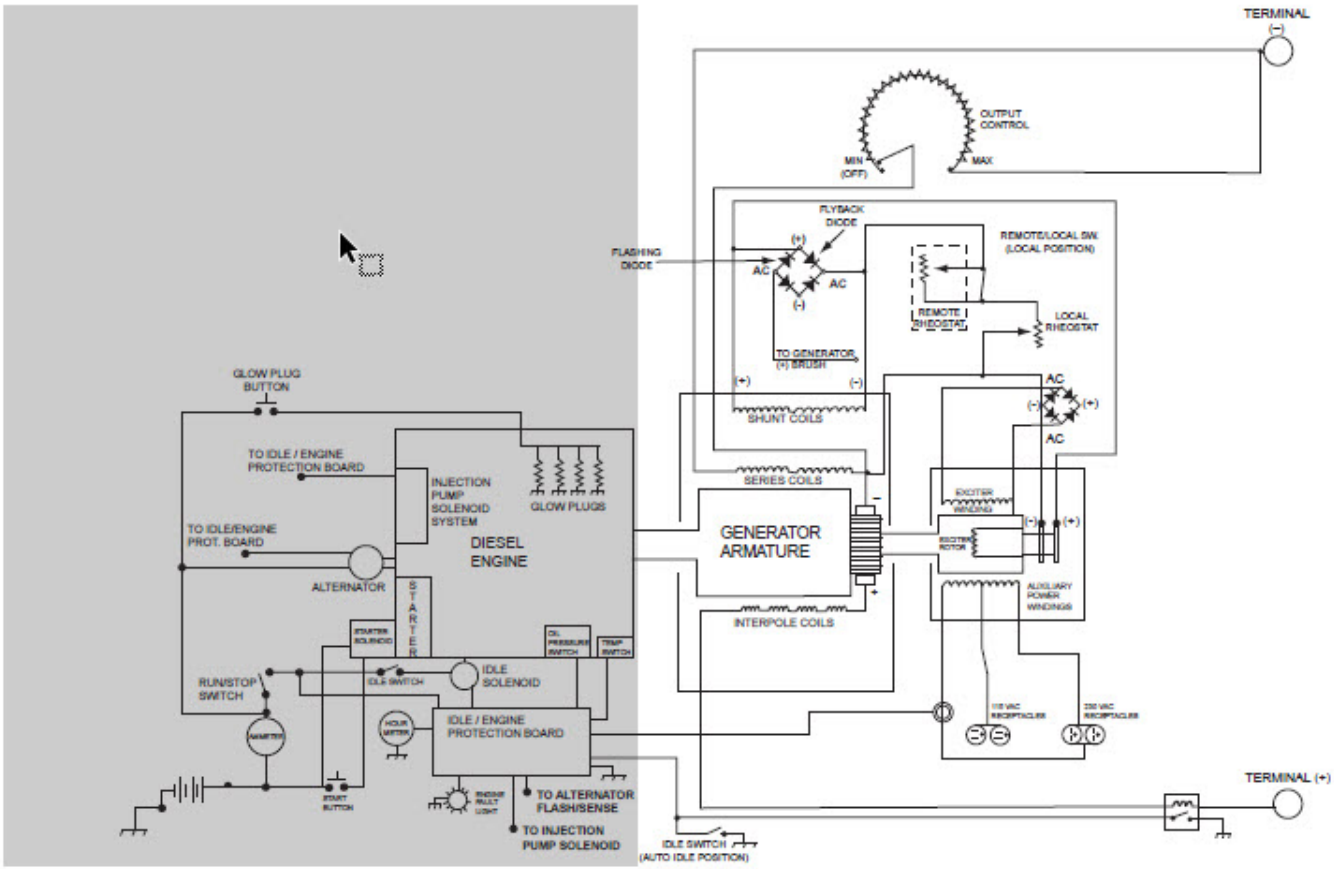

Turning on the run/stop switch supplies 12VDC power to idler/engine protection PC board and idle solenoid. During the first minute after the switch is placed in the on position, power is supplied to the Fuel solenoid, the hour meter and the flashing circuit for the engine alternator. The engine should be started during this first minute.

After one minute, the PC board will begin to monitor the oil pressure switch, cooling system temp switch and the engine alternator. If a fault is detected in any of these systems, the engine fault light will come on and the engine will be shut down by shutting off the power to the fuel solenoid. These systems signal a fault by connecting the sense lead to chassis ground.

If the engine fault light turns on, the engine protection system must be reset by turning the run/stop switch off, then on again before attempting to restart the engine.

The machine is equipped with a glow plug starting system that is used for cold weather starting. Pressing the Glow Plug button activates this system. See the machine nameplate and engine manual for operating instructions and service information.

Pressing the start button activates the starter motor which cranks the engine. The start button is a momentary contact switch that routes power from the battery to the starting terminal of the starter solenoid. The starter will crank the engine even if the run/stop switch is in the off position.

AUTOMATIC ENGINE IDLE SYSTEM

FIGURE F.3 – AUTOMATIC ENGINE IDLE SYSTEM

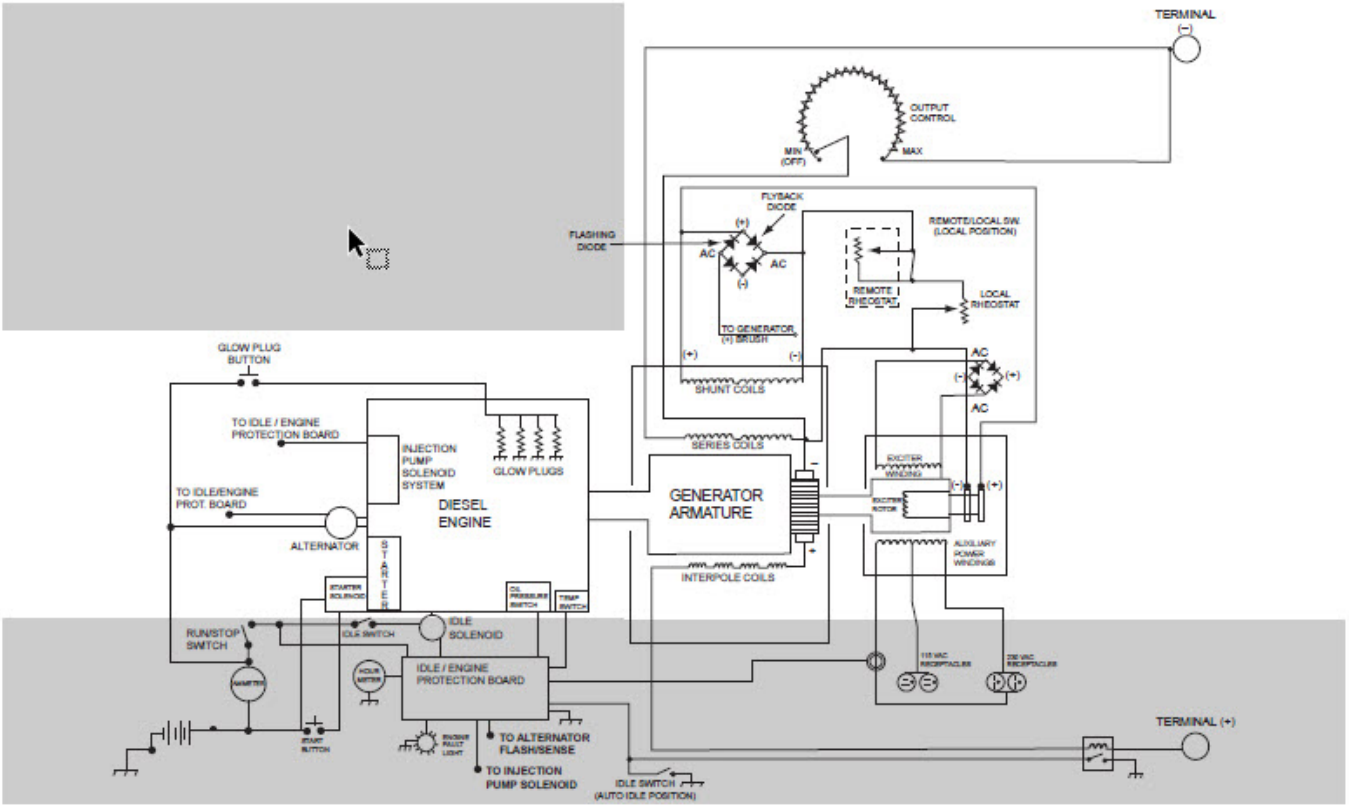

The automatic idle system reduces the engine RPM when there is no electrical demand on the machine. When an arc is struck, or a load of 100 Watts or greater is applied to the auxiliary output, the engine speed will immediately increase to high RPM. When the load is released, the engine continues to run at high RPM for about 12 seconds. If a load is re-applied during this time, the machine will continue to operate at high RPM. If no load is applied, the engine RPM is reduced to idle speed.

The automatic idle system functions by energizing a solenoid, which pulls the engine speed control to a preset low idle RPM position. When this solenoid is deenergized, the engine speed is controlled by the governor which maintains the engine RPM at the specified high RPM setting. The solenoid is supplied with +12VDC power and is activated when circuitry on the Idler/engine shutdown PC board completes the solenoid's path to chassis ground.

The automatic idle circuitry on the PC board uses a magnetic reed switch to sense weld current and a toroidal current transformer to sense auxiliary current. When weld current flows the reed switch closes, connecting the sense lead to chassis ground. When sufficient AC current flows, the toroidal current transformer sends a signal to the PC board.

When the idle switch is in the "high" position, the sense lead connecting the reed switch to the idler/engine protection PC board is connected to chassis ground. The **SAE-300®** will continuously run at high RPM.

If the machine had been operating at low idle and the idle switch is moved from auto to high, the engine RPM will increase immediately. If the switch is moved from "high" to "auto" and if there is no electrical demand from either the weld or the auxiliary circuits, the RPM will be reduced after a 12 second delay.

EXCITER / AUXILIARY ALTERNATOR OPERATION

FIGURE F.4 – EXCITER / AUXILIARY OPERATION

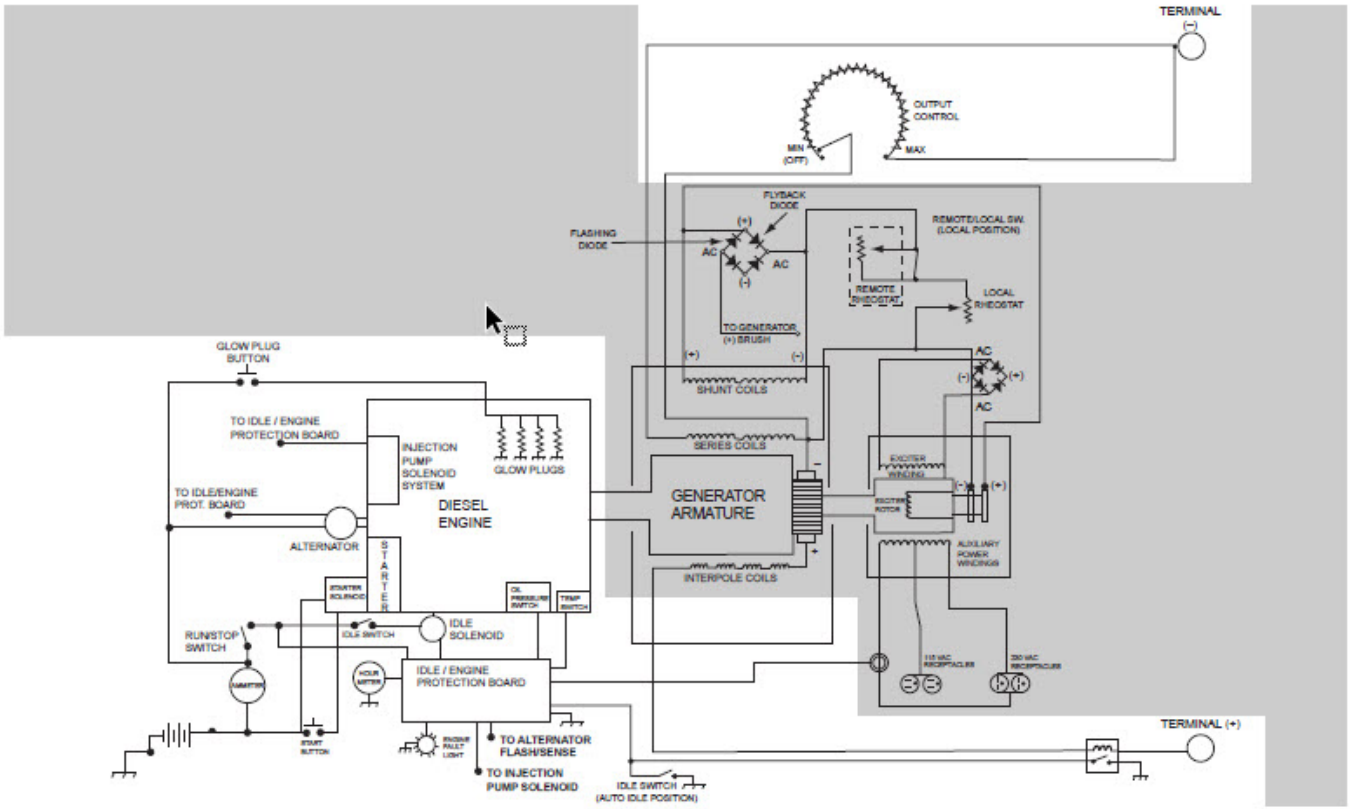

The exciter alternator is the smaller power generator that is located at the end of the main welding generator. It provides power to energize the rotor, the shunt fields of the main welding generator and about 3 KVA of 120/230 volts, 60 Hz. for auxiliary power.

Flashing:

The exciter alternator requires that DC power be applied to the slip rings to start the power generation process. This DC power is often referred to as “Flashing” voltage.

Flashing voltage is low voltage (about 4 to 6 VDC) generated by the main armature spinning in a weak magnetic field. This magnetic field is caused by residual magnetism in the iron poles of the generator.

Flashing current passes through a flashing diode and is applied to the rotor field winding through the exciter brushes and slip rings.

Building output:

The flashing current produces a weak magnetic field in the rotor, which is coupled to the now running engine. This rotating magnetic field begins to generate AC output from all of the stator windings. Output from the exciter winding is rectified by a diode bridge and then fed back into the rotating field winding, through the brushes, making the magnetic field stronger. This stronger magnetic field then produces higher voltage from the stator windings, which feeds back to the rotor, making its magnetic field even stronger.

This process of strengthening the magnetic field through feedback from the exciter winding continues to increase the output of the alternator until the design voltage is reached.

The field voltage is now higher than the voltage produced by the welding generator. The flashing diode will now block the higher voltage from intruding into the weld circuit.

(continued on next page)

EXCITER / AUXILIARY ALTERNATOR OPERATION (Continued)

AC Auxiliary Output:

The exciter alternator is now producing sufficient AC power from both the exciter winding and the 115/230 VAC auxiliary power winding. This 115/230 VAC, 60 Hz. auxiliary power is made available for use through the receptacles on the front panel of the machine, after passing through circuit breakers and the automatic idle system's current sensor.

WELDER GENERATOR AND EXCITOR

FIGURE F.5 – WELDING GENERATOR AND EXCITER

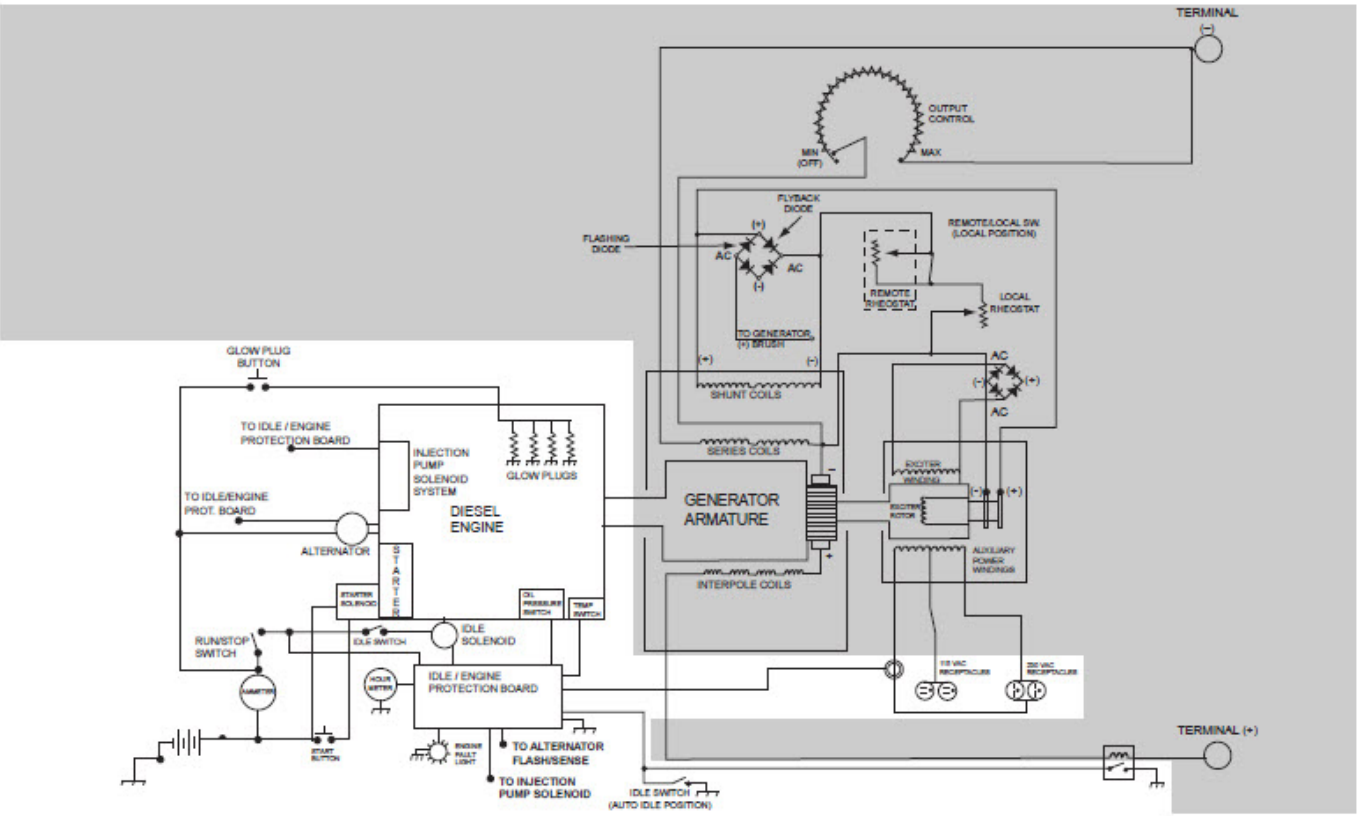

Overview:

The welding generator is coupled directly to the engine and produces the DC current required for welding and arc gouging. The welding power is induced in the windings of the armature when it spins in a magnetic field. The power produced in the armature is converted to direct current (DC) by a commutator and a set of carbon brushes, which are then connected to the interpole coils, the series coils and the reactor assembly. The weld current is controlled by varying the field (Fine Current and O.C.V. Control) and the reactor (Coarse Current Control) setting, using the front panel control knobs.

EXCITATION AND FIELD CONTROL:

Before any welding current can be produced, there must be a strong magnetic field in which the armature can spin. Creating this magnetic field is often described as exciting the generator and is accomplished by passing controlled DC current through two shunt coils in the generator stator.

The power used to excite the main welding generator is the same rectified DC current used to power the rotating field of the exciter alternator. (See the section ***EXCITER/AUXILIARY ALTERNATOR OPERATION***). This DC current passes through the remote / local switch and then through either the panel mounted rheostat (Fine Current and O.C.V. control), or a remote fine current control rheostat. The controlled DC current then passes through the two series connected shunt field coils in the welding generator stator.

When the remote/local switch is moved from one position to another, there is a brief period of time when the coils are disconnected. When this happens, the magnetic field around the shunt field coils collapses causing a very high induced voltage spike in the shunt coil circuit. A flyback spike without damaging insulation or the remote/local switch.

WELDING GENERATOR OPERATION (Continued)

FIGURE F.6 – WELDING GENERATOR

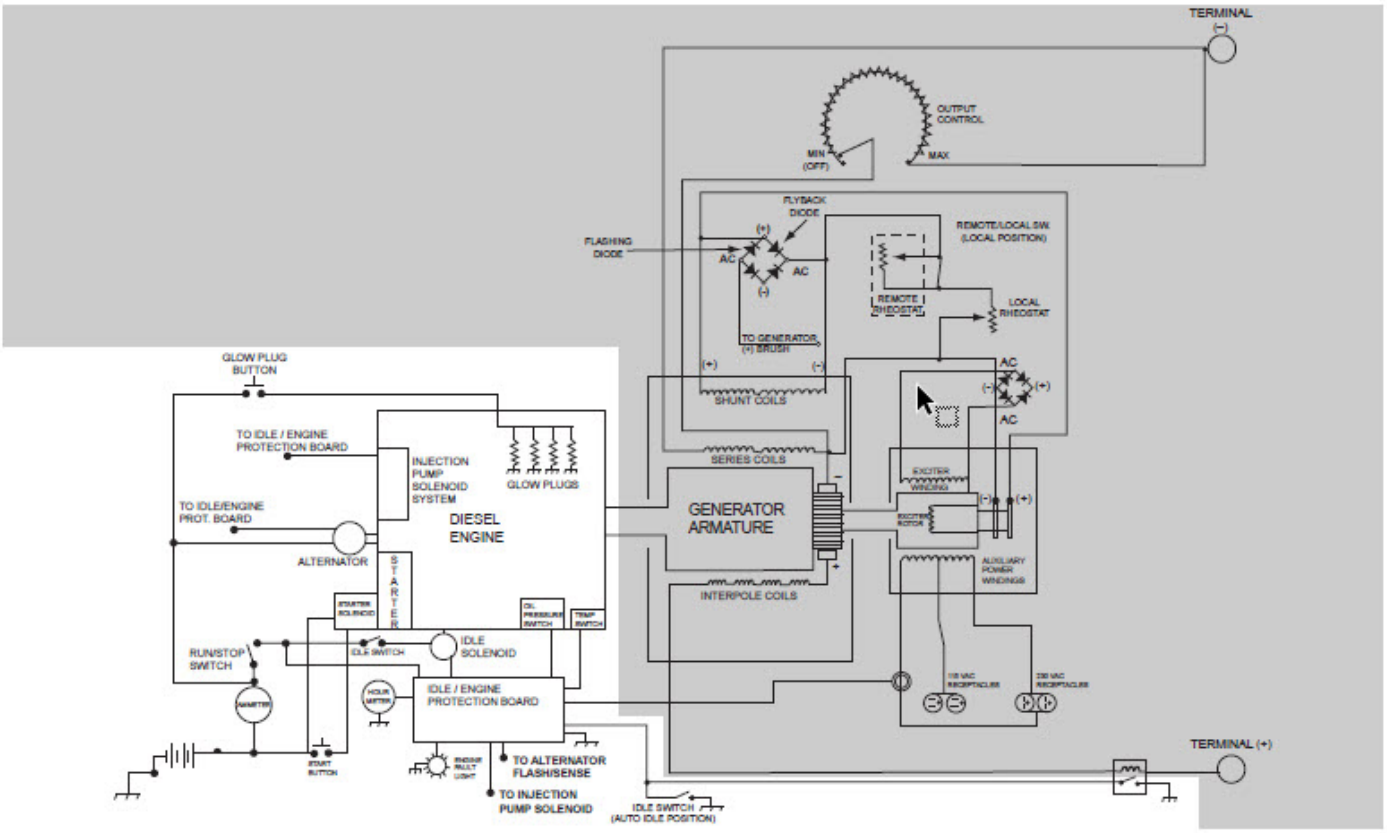

Producing weld current:

Weld current is produced in the armature windings when it spins in the magnetic field produced by the excitation process described above. The 64 Ohm rheostat in the excitation circuit varies the strength of the field. A stronger field will produce greater weld output; a weaker field will produce less.

As the windings in the armature pass through the magnetic field, current flows, first in one direction, then the other. This alternating current flow is converted to direct current (DC) and connected to the remaining generator circuitry through a commutator and a system of brushes.

The commutator is a cylindrical structure made up of copper conductor bars and insulating materials that keep each bar isolated from the other bars and from the armature shaft. Each bar is connected to the end of an armature winding.

The brushes contact the commutator at precise points around its circumference and are positioned so that they will conduct current only from windings that are producing maximum output at the correct polarity.

With the armature spinning at about 1800 RPM, windings are coming in contact with the brushes many times per second, producing a continuous flow of DC current at the generator brushes.

Controlling the weld output:

The **SAE-300®** utilizes a dual continuous control system for weld output. These controls are the Fine Current and O.C.V. control and the Coarse Current Control dials on the control panel.

WELDING GENERATOR OPERATION (Continued)

Fine Current And O.C.V. Control:

The fine current and O.C.V. control handle manipulates the 64 Ohm rheostat in the weld generator excitation circuit. This rheostat controls the current passing through the shunt field coils in the weld generator. Changing the current in these coils changes the current output of the weld generator and has a significant affect on the open circuit voltage (O.C.V.)

Interpole coils:

Armature current from the positive brushes are routed through four interpole coils, before being connected to the weld output terminal. These coils are narrower than the shunt and series coils and are located in the generator stator between them. Their purpose is to reduce distortion of the magnetic field. The magnetic field generated by the shunt coils will become distorted when current is drawn from the armature. This distortion will increase as the current flow increases. The interpole coils are connected and arranged to counteract this magnetic distortion. If not corrected, the distortion would cause reduced output and excessive sparking on the commutator.

Current Control:

The Coarse Current Control handle turns a rotor inside the reactor assembly. This reactor assembly functions together with the generator's series coils to regulate the output current and produce the drooping volt/amp curve that is so important to a constant current welding source. This current control has almost no effect on the OCV.

Series coils and reactor:

Current from the negative brushes is routed through the generator's series coils and the reactor assembly before being connected to the negative weld output terminal. These series coils are wound and arranged in such a way as to reduce or buck the current flowing from the armature. Because the series coils do not reduce the weld output until current is flowing, OCV is not reduced and starting the arc is easier.

Reactor Assembly:

The reactor assembly functions like a specialized, high current rheostat and is connected in parallel with the series coils of the generator. At the very minimum setting the reactor is electrically open, forcing all of the current flowing from the armature to pass through the series coils. This setting will produce the lowest weld current that can be set with this control.

Moving the current control off of the minimum setting closes the circuit in the reactor and allows some of the current to bypass the series coils. Continuing to move the control to the higher settings reduces the resistance of the reactor and causes even more current to bypass the series coils. When the current control is set to maximum, the reactor resistance is at minimum and nearly all of the current passes through the reactor. Because the current passing through the reactor is not reduced by the bucking action of the series coils, weld current is increased.

Troubleshooting & Repair

HOW TO USE TROUBLESHOOTING GUIDE

⚠ WARNING

Service and repair should be performed by only Lincoln Electric Factory Trained Personnel. Unauthorized repairs performed on this equipment may result in danger to the technician and machine operator and will invalidate your factory warranty. For your safety and to avoid Electrical Shock, please observe all safety notes and precautions detailed throughout this manual.

This Troubleshooting Guide is provided to help you locate and repair possible machine malfunctions. Simply follow the three-step procedure listed below.

Step 1. LOCATE PROBLEM (SYMPTOM). Look under the column labeled "PROBLEM" (SYMPTOMS). This column describes possible symptoms that the machine may exhibit. Find the listing that best describes the symptom that the machine is exhibiting. Symptoms are grouped into two main categories: Output Problems and Engine Problems.

Step 2. PERFORM EXTERNAL TESTS. The second column, labeled "POSSIBLE AREAS OF MISADJUSTMENT(S)", lists the obvious external possibilities that may contribute to the machine symptom. Perform these tests/checks in the order listed. In general, these tests can be conducted without removing the case cover.

Step 3. PERFORM COMPONENT TESTS. The last column, labeled "Recommended Course of Action" lists the most likely components that may have failed in your machine. It also specifies the appropriate test procedure to verify that the subject component is either good or bad. If there are a number of possible components, check the components in the order listed to eliminate one possibility at a time until you locate the cause of your problem.

All of the referenced test procedures referred to in the Troubleshooting Guide are described in detail at the end of this section. Refer to the Troubleshooting and Repair Table of Contents to locate each specific Test Procedure. All of the referred to test points, components, terminal strips, etc., can be found on the referenced electrical wiring diagrams and schematics. Refer to the Electrical Diagrams Section Table of Contents to locate the appropriate diagram.

⚠ CAUTION

If for any reason you do not understand the test procedures or are unable to perform the test/repairs safely, contact the Lincoln Electric Service Department for electrical troubleshooting assistance before you proceed. Call 1-888-935-3877.

PC BOARD TROUBLESHOOTING PROCEDURES

⚠ WARNING

ELECTRIC SHOCK can kill.

• Have an electrician install and service this equipment. Turn the input power OFF at the fuse box before working on equipment. Do not touch electrically hot parts.

⚠ CAUTION

Sometimes machine failures appear to be due to PC board failures. These problems can sometimes be traced to poor electrical connections. To avoid problems when troubleshooting and replacing PC boards, please use the following procedure:

1. Determine to the best of your technical ability that the PC board is the most likely component causing the failure symptom.
2. Check for loose connections at the PC board to assure that the PC board is properly connected.
3. If the problem persists, replace the suspect PC board using standard practices to avoid static electrical damage and electrical shock. Read the warning inside the static resistant bag and perform the following procedures:

PC board can be damaged by static electricity.

• Remove your body's static charge before opening the static-shielding bag. Wear an anti-static wrist strap. For safety, use a 1 Meg ohm resistive cord connected to a grounded part of the equipment frame.

ATTENTION
Static-Sensitive Devices
Handle only at Static-Safe Workstations

Reusable Container
Do Not Destroy

• If you don't have a wrist strap, touch an un-painted, grounded, part of the equipment frame. Keep touching the frame to prevent static build-up. Be sure not to touch any electrically live parts at the same time.

• Tools which come in contact with the PC board must be either conductive, anti-static or static-dissipative.

• Remove the PC board from the static-shielding bag and place it directly into the equipment. Don't set the PC board on or near paper, plastic or cloth which could have a static charge. If the PC board can't be installed immediately, put it back in the static-shielding bag.

• If the PC board uses protective shorting jumpers, don't remove them until installation is complete.

• If you return a PC board to The Lincoln Electric Company for credit, it must be in the static-shielding bag. This will prevent further damage and allow proper failure analysis.

4. Test the machine to determine if the failure symptom has been corrected by the replacement PC board.

NOTE: It is desirable to have a spare (known good) PC board available for PC board troubleshooting.

NOTE: Allow the machine to heat up so that all electrical components can reach their operating temperature.

5. Remove the replacement PC board and substitute it with the original PC board to recreate the original problem.

a. If the original problem does not reappear by substituting the original board, then the PC board was not the problem. Continue to look for bad connections in the control wiring harness, junction blocks and terminal strips.

b. If the original problem is recreated by the substitution of the original board, then the PC board was the problem. Reinstall the replacement PC board and test the machine.

6. Always indicate that this procedure was followed when warranty reports are to be submitted.

NOTE: Following this procedure and writing on the warranty report, "INSTALLED AND SWITCHED PC BOARDS TO VERIFY PROBLEM," will help avoid denial of legitimate PC board warranty claims.

Troubleshooting guide

Observe Safety Guidelines detailed in the beginning of this manual.		**TROUBLESHOOTING GUIDE**
PROBLEMS (SYMPTOMS)	**POSSIBLE AREAS OF MISADJUSTMENT(S)**	**RECOMMENDED COURSE OF ACTION**
OUTPUT PROBLEMS		
Major physical or electrical damage is evident when the sheet metal covers are removed.	1. Contact your local authorized Lincoln Electric Service Facility.	1. Contact the Lincoln Electric Service Department at 1-888-935-3877.
Both the weld and auxiliary output voltages are low.	1. Make sure the engine is operating at the correct high idle speed. 2. Make sure that no load is connected to either the weld or auxiliary outputs.	1. Perform the ***Brush And Slip Ring Service Procedure (Exciter / Auxiliary Power Alternator)***. 2. Perform the ***Exciter Rotor Voltage Test Procedure***. 3. Perform the ***Exciter Rotor Resistance And Ground Test Procedure (Exciter / Auxiliary Power Alternator)***.
There is no or very low weld output and no auxiliary output.	1. Check that the remote/local switch is in the local control position. 2. Check that the auxiliary power circuit breakers and GFCIs (if so equipped) are not tripped. **NOTE:** GFCIs will not reliably reset, unless engine is operating at high idle RPM. 3. Check all leads and cables for damaged or poor connections.	1. Perform the ***Brush And Slip Ring Service Procedure (Exciter / Auxiliary Power Alternator)***. 2. Perform the ***Exciter Rotor Voltage Test Procedure***. 3. Perform the ***Exciter Rotor Resistance And Ground Test Procedure (Exciter / Auxiliary Power Alternator)***. 4. Perform the ***Flashing Voltage Test Procedure***. 5. Perform the ***Exciter Stator Short Circuit And Ground Test Procedure***.

⚠ CAUTION

If for any reason you do not understand the test procedures or are unable to perform the test/repairs safely, contact the Lincoln Electric Service Department for electrical troubleshooting assistance before you proceed. Call 1-888-935-3877.

Observe Safety Guidelines detailed in the beginning of this manual.		**TROUBLESHOOTING GUIDE**
PROBLEMS (SYMPTOMS)	**POSSIBLE AREAS OF MISADJUSTMENT(S)**	**RECOMMENDED COURSE OF ACTION**
OUTPUT PROBLEMS		
There is no or very low weld output. Auxiliary output is normal.	1. Check that the remote/local switch is positioned correctly. 2. If a remote current control is being used, try switching to local control. The remote current control may be faulty. 3. Check all leads and cables for damaged or poor connections.	1. Perform the ***Shunt Field Coil Resistance And Ground Test Procedure***. 2. Perform the ***Shunt Field Circuit Voltage Test Procedure***. 3. Perform the ***Welding Generator Brush And Commutator Inspection And Service Procedure***. 4. Check for damaged or poor connections at the brush holders, series and interpole coils, coarse current control unit, weld output terminals and all the conductors connecting these components. 5. Perform the ***Weld Circuit Ground And Short Circuit Test Procedure***. 6. The armature may be faulty.
There is no auxiliary voltage at receptacles but weld output is normal.	1. Check that the auxiliary power circuit breakers are not tripped. 2. If the machine is equipped with a ground fault circuit interrupter (GFCI), it may be tripped or defective. **NOTE:** GFCIs will not reliably reset, unless engine is operating at high idle RPM. 3. Check all leads and cables for damaged or poor connections.	1. Check for auxiliary voltage at the receptacle input terminals; if normal voltage is present, replace terminals. 2. Check for auxiliary voltage at the connections closest to the exciter stator windings. See Wiring Diagram. • If normal voltage is present, check the wiring and circuit breakers between the test points and the receptacle. Repair or replace any defective parts or wiring.

⚠ CAUTION

If for any reason you do not understand the test procedures or are unable to perform the test/repairs safely, contact the Lincoln Electric Service Department for electrical troubleshooting assistance before you proceed. Call 1-888-935-3877.

Observe Safety Guidelines detailed in the beginning of this manual.		**TROUBLESHOOTING GUIDE**
PROBLEMS (SYMPTOMS)	**POSSIBLE AREAS OF MISADJUSTMENT(S)**	**RECOMMENDED COURSE OF ACTION**
OUTPUT PROBLEMS		
The weld output varies abnormally. Auxiliary voltage is normal.	1. Check welding cables for damaged or poor connections. 2. Welding cable may be excessively long, too small or coiled. Try using a set of short test cables of adequate size. 3. If a remote current control is being used, try switching to local control. The remote current control may be faulty. 4. The engine may not be maintaining steady RPM. Make sure there is an adequate supply of clean, fresh fuel. Replace fuel filters if necessary. Have engine serviced by a qualified engine technician.	1. Check and if necessary, perform the ***Brush And Slip Ring Service Procedure (Exciter / Auxiliary Power Alternator)***. 2. Perform the ***Welding Generator Brush And Commutator Inspection And Service Procedure***. 3. Check all the large weld current carrying leads inside the machine for damaged conductors, insulation and poor connections. 4. Perform the ***Coarse Current Control Unit (Variable Reactor) Inspection And Service Procedure***. 5. Check the wiring that connects the exciter, diode bridges, rheostat and shunt coils. Check for damaged conductors, insulation and connections. 6. Perform the ***Rheostat test Procedure***. 7. Check remote/local switch, replace if necessary. 8. Perform the ***Choke Test Procedure***. 9. Perform the ***Shunt Field Coil Resistance And Ground Test Procedure***. 10. Check the generator brush rocker position; perform the ***Rocker Adjustment Procedure***, if necessary.
If for any reason you do not understand the test procedures or are unable to perform the test/repairs safely, contact the Lincoln Electric Service Department for electrical troubleshooting assistance before you proceed. Call 1-888-935-3877.		

Observe Safety Guidelines detailed in the beginning of this manual.		**TROUBLESHOOTING GUIDE**
PROBLEMS (SYMPTOMS)	**POSSIBLE AREAS OF MISADJUSTMENT(S)**	**RECOMMENDED COURSE OF ACTION**
OUTPUT PROBLEMS		
The weld output is considerably less than indicated on the dials. Auxiliary voltage is normal.	1. Check welding cables for damaged or poor connections. 2. Welding cable may be excessively long, too small or coiled. Try using a set of short test cables of adequate size. 3. If a remote current control is being used, try switching to local control. The remote current control may be faulty. 4. The engine RPM may be low. Make sure there is an adequate supply of clean, fresh fuel. Replace fuel filters if necessary. Have engine serviced by a qualified engine technician.	1. Perform the ***Welding Generator Brush And Commutator Inspection And Service Procedure***. 2. Perform the ***Brush And Slip Ring Service Procedure (Exciter / Auxiliary Power Alternator)***. 3. Perform the ***Shunt Field Coil Resistance And Ground Test Procedure***. 4. Perform the ***Dead Short, 1st Step and Open Reactor Test Procedures***. If necessary, perform the ***Coarse Current Control Unit (Variable Reactor) Inspection And Service Procedure***. 5. Perform the ***Exciter Rotor Resistance And Ground Test Procedure (Exciter / Auxiliary Power Alternator)***. 6. Check all the large weld current carrying leads inside the machine for damaged conductors, damages insulation and poor connections. 7. Check the wiring that connects the exciter, diode bridges, rheostat, remote/local switch and the shunt coils. Check for damaged conductors, insulation and connections. 8. Perform the ***Rheostat Test Procedure***. 9. Check remote / local switch. Replace if necessary. 10. Verify that the rocker is positioned correctly, according to the factory drill mark. If

		necessary, perform the ***Rocker Adjustment Procedure***.

⚠ CAUTION

If for any reason you do not understand the test procedures or are unable to perform the test/repairs safely, contact the Lincoln Electric Service Department for electrical troubleshooting assistance before you proceed. Call 1-888-935-3877.

Observe Safety Guidelines detailed in the beginning of this manual.		**TROUBLESHOOTING GUIDE**
PROBLEMS (SYMPTOMS)	**POSSIBLE AREAS OF MISADJUSTMENT(S)**	**RECOMMENDED COURSE OF ACTION**
OUTPUT PROBLEMS		
The weld output is considerably higher than indicated on the dials. Auxiliary voltage is normal.	1. If a remote current control is being used, try switching to local control. The remote current control may be faulty.	1. Verify that the rocker is positioned correctly, according to the factory drill mark. 2. Perform the ***Dead Short, 1st Step And Open Reactor Test Procedures***. 3. Perform the ***Exciter Rotor Resistance And Ground Test Procedure (Exciter / Auxiliary Power Alternator)***. 4. Perform the ***Shunt Field Coil Resistance And Ground Test Procedure***. 5. Perform the ***Rocker Adjustment Procedure***.
The welding arc is loud and spatters excessively.	1. The weld current or voltage settings may be incorrect. 2. The polarity may be incorrect for the process in use. 3. If a remote current control is being used, try switching to local control. The remote current control may be faulty.	1. The engine RPM may be incorrect. 2. Perform the ***Brush And Slip Ring Service Procedure (Exciter / Auxiliary Power Alternator)***. 3. Perform the ***Welding Generator Brush And Commutator Inspection And Service Procedure***. 4. Perform the ***Dead Short, 1st Step And Open Reactor Test Procedures***. 5. Perform the ***Exciter Rotor Resistance And Ground Test Procedure (Exciter / Auxiliary Power Alternator)***. 6. Perform the ***Shunt Field Coil Resistance And Ground Test Procedure***. 7. Check that the rocker is aligned to the factory drill mark and perform the ***Rocker Adjustment Procedure***, if necessary.

		8. Check the series coils for turn to turn shorts.

⚠ CAUTION

If for any reason you do not understand the test procedures or are unable to perform the test/repairs safely, contact the Lincoln Electric Service Department for electrical troubleshooting assistance before you proceed. Call 1-888-935-3877.

Observe Safety Guidelines detailed in the beginning of this manual.		**TROUBLESHOOTING GUIDE**
PROBLEMS (SYMPTOMS)	**POSSIBLE AREAS OF MISADJUSTMENT(S)**	**RECOMMENDED COURSE OF ACTION**
OUTPUT PROBLEMS		
The welding arc frequently "pops out". Welding seems otherwise normal and auxiliary output voltage appears normal.	1. Fine Current / OCV Control rheostat may be set too low. 2. If a remote control is being used, try switching to local control. The remote control unit may be faulty. 3. Check welding cables for damaged or poor connections. 4. Welding cable may be excessively long, too small or coiled. Try using a set of short test cables of adequate size.	1. Perform the ***Brush And Slip Ring Service Procedure (Exciter / Auxiliary Power Alternator)***. 2. Perform the ***Welding Generator Brush And Commutator Inspection And Service Procedure***. 3. Perform the ***Coarse Current Control Unit (Variable Reactor) Inspection And Service Procedure***. 4. Perform the ***Exciter Rotor Voltage Test Procedure***. 5. Perform the ***Shunt Field Circuit Voltage Test Procedure***. 6. Check that the rocker is aligned to the factory drill mark and perform the ***Rocker Adjustment Procedure***, if necessary.

⚠ CAUTION

If for any reason you do not understand the test procedures or are unable to perform the test/repairs safely, contact the Lincoln Electric Service Department for electrical troubleshooting assistance before you proceed. Call 1-888-935-3877.

Observe Safety Guidelines detailed in the beginning of this manual.		**TROUBLESHOOTING GUIDE**
PROBLEMS (SYMPTOMS)	**POSSIBLE AREAS OF MISADJUSTMENT(S)**	**RECOMMENDED COURSE OF ACTION**
ENGINE PROBLEMS		
The engine will not crank when the start button is pressed.	1. The battery may be discharged. Check and if necessary, charge or replace the battery. 2. The battery cables or battery connections may be loose or corroded. Service the battery terminals.	1. Check for battery voltage where lead 50 connects to the starter solenoid, while holding in the start button. • If no voltage is present, check the connections and wiring connecting the starter solenoid and the start push button switch. See Wiring Diagram. If the wiring and connections are good, replace the push button switch. • If voltage is present, check that the negative battery terminal is properly connected to the engine block. If the battery is properly connected, the starter/solenoid is defective and should be serviced or replaced.

⚠ CAUTION

If for any reason you do not understand the test procedures or are unable to perform the test/repairs safely, contact the Lincoln Electric Service Department for electrical troubleshooting assistance before you proceed. Call 1-888-935-3877.

Observe Safety Guidelines detailed in the beginning of this manual.		TROUBLESHOOTING GUIDE
PROBLEMS (SYMPTOMS)	**POSSIBLE AREAS OF MISADJUSTMENT(S)**	**RECOMMENDED COURSE OF ACTION**
ENGINE PROBLEMS		
The engine cranks when the start button is pressed, but will not start.	1. Make sure the run/stop switch is in the run position. 2. The run/stop switch may have been left in the run position for more than 30 seconds (60 seconds on some models). Move switch to the stop position, then after a few seconds, move it back to the run position. 3. If the machine is being used in a cold climate, the thermostat or glow plug system may need to be used. See the welder's operator manual and the engine operator's manual for detailed instructions. 4. Check that there is an adequate supply of fresh clean fuel and that the fuel shut-off valve is open. 5. Check and if necessary, replace the fuel filter. 6. There may be air in the fuel system. See the engine manufacturers manual and bleed all air from the fuel system.	1. Perform the ***Engine Governor Controller (EGC) Test Procedure***.

⚠ CAUTION

If for any reason you do not understand the test procedures or are unable to perform the test/repairs safely, contact the Lincoln Electric Service Department for electrical troubleshooting assistance before you proceed. Call 1-888-935-3877.

Observe Safety Guidelines detailed in the beginning of this manual.		**TROUBLESHOOTING GUIDE**
PROBLEMS (SYMPTOMS)	**POSSIBLE AREAS OF MISADJUSTMENT(S)**	**RECOMMENDED COURSE OF ACTION**
ENGINE PROBLEMS		
The engine starts normally, but shuts down after running for several seconds.	1. The oil pressure may be low. Check the oil level and add oil as needed. If necessary, contact the engine manufacturer, or a qualified engine specialist to determine the cause of the low oil pressure condition and make any required adjustments or repairs. 2. The engine may be overheated. Contact the engine manufacturer or a qualified engine specialist to determine the cause of the overheat condition and make any required adjustments or repairs.	1. The engine, oil pressure switch or engine coolant temperature switch may be faulty. 2. Perform the ***Engine Governor Controller (EGC) Test Procedure***.
The engine will not develop full power.	1. Check that there is an adequate supply of fresh clean fuel and that the fuel shut-off valve is fully open. 2. Check the fuel and air filters, replace if necessary.	1. There may be internal problems with the engine. Contact the engine manufacturer or a qualified engine repair technician.
The engine will not shut down when the run/stop switch is moved to the stop position.	1. Check operation of the Run/Stop switch.	1. Perform the ***Engine Governor Controller (EGC) Test Procedure***.
The battery does not stay charged.	1. The battery may be faulty. Recharge and test the battery. Replace if necessary. 2. The engine alternator drive belt may be loose. Replace and/or adjust the belt tension.	1. Perform the ***Engine Alternator Test Procedure***.

⚠ CAUTION

If for any reason you do not understand the test procedures or are unable to perform the test/repairs safely, contact the Lincoln Electric Service Department for electrical troubleshooting assistance before you proceed. Call 1-888-935-3877.

Observe Safety Guidelines detailed in the beginning of this manual.		**TROUBLESHOOTING GUIDE**
PROBLEMS (SYMPTOMS)	**POSSIBLE AREAS OF MISADJUSTMENT(S)**	**RECOMMENDED COURSE OF ACTION**
ENGINE PROBLEMS		
The machine will not idle down to low RPM when weld and auxiliary loads are removed. The machine has normal weld and auxiliary output. The engine starts and shuts down normally.	1. Make sure the idle switch is in the "AUTO IDLE" position. 2. Make sure there is no external load on the weld terminals or the auxiliary power receptacles. Disconnect the weld cables and unplug anything that may be connected to the auxiliary receptacles.	1. The current sense board may be faulty. Perform the ***Current Sense Board Test Procedure***.
The engine goes to low idle, but will not stay at low idle. The machine has normal weld and auxiliary output. The engine starts and shuts down normally.	1. Make sure there are no external loads on the weld terminals or the auxiliary power receptacles. Disconnect the weld cables and unplug anything that may be connected to the auxiliary receptacles.	1. The current sense board may be faulty. Perform the ***Current Sense Board Test Procedure***. 2. Perform the ***Engine Governor Controller (EGC) Test Procedure***.
The engine will not go to high idle when the idle switch is moved to the "high" position. The idle system functions normally while welding or using auxiliary power. The engine starts and shuts down normally.		1. The idle switch may be defective or there may be a faulty connection between the electronic engine governor (EGC), the idle switch and the chassis ground connection.

⚠ CAUTION

If for any reason you do not understand the test procedures or are unable to perform the test/repairs safely, contact the Lincoln Electric Service Department for electrical troubleshooting assistance before you proceed. Call 1-888-935-3877.

Observe Safety Guidelines detailed in the beginning of this manual.		**TROUBLESHOOTING GUIDE**
PROBLEMS (SYMPTOMS)	**POSSIBLE AREAS OF MISADJUSTMENT(S)**	**RECOMMENDED COURSE OF ACTION**
ENGINE PROBLEMS		
The engine will not go to high idle when striking an arc. The automatic idle system functions normally when using auxiliary power. Weld and auxiliary power are normal when the idle switch is in the "High Idle" position. The engine starts, runs and shuts down normally.	1. Check that the welding cables, electrode holder and work clamp are tight and in good condition.	1. The current sense board may be faulty. Perform the ***Current Sense Board Test Procedure***.
The engine will not go to high idle when using auxiliary power. The automatic idle system functions normally when welding. Weld and auxiliary power is normal when the idle switch is in the "high Idle" position. The engine starts, runs and shuts down normally.	1. The load applied to the auxiliary receptacles may be too low. A load of 100 Watts minimum is required for the idle system to operate reliably. 2. Check that any power cords are in good condition and properly connected. 3. Verify that any devices operating from the auxiliary AC power are operating correctly and are in good condition. Try plugging the device into another source of AC power to be sure it is functioning properly. 4. Some devices may test the input power for correct voltage and frequency before they will operate. If such a device is being used, the idle switch will need to be placed in the "High" position. The current drawn by many of these devices, when testing the power, is too low to reliably activate the automatic idle system.	1. The current sense board may be faulty. Perform the ***Current Sense Board Test Procedure***.

⚠ CAUTION

If for any reason you do not understand the test procedures or are unable to perform the test/repairs safely, contact the Lincoln Electric Service Department for electrical troubleshooting assistance before you proceed. Call 1-888-935-3877.

Test Procedures

BRUSH AND SLIP RING SERVICE PROCEDURE (Exciter / Auxiliary Power Alternator)

Service and repair should be performed by only Lincoln Electric factory trained personnel. Unauthorized repairs performed on this equipment may result in danger to the technician or machine operator and will invalidate your factory warranty. For your safety and to avoid electrical shock, please observe all safety notes and precautions detailed throughout this manual. If for any reason you do not understand the test procedures or are unable to perform the test/repairs safely, contact the Lincoln Electric Service Department for electrical troubleshooting assistance before you proceed. Call 1-888-935-3877.

TEST DESCRIPTION

This procedure provides guidance in testing and maintaining the Brush and Slip Ring System of the Exciter / Auxiliary Power Alternator.

MATERIALS NEEDED

500 Or 600 Grit Emery Cloth
180 Grit Sandpaper
220 Or 320 Grit Commutator Stone (Optional)

TEST PROCEDURE

1. Turn off the engine on the SAE-300 HE machine.
2. Remove the covers from the exciter / auxiliary power alternator by removing the screws securing it.
3. Examine brushes, slip rings and brush holder. See ***Figure F.7***.
   • Brushes should be clean and free from oil or grease.
   • The brushes should be of sufficient length and have adequate spring tension.
   • Brushes should be making good, continuous contact with the slip rings and should be riding near the center of the slip rings.
   (The brush holder bracket may need to be slightly bent to achieve acceptable alignment.)
   (Generally, the brushes should be replaced if either brush has less than 1/4" remaining before it reaches the end of its travel.)
4. If the slip rings are very dark in color, display evidence of excessive arcing, or have worn prematurely, these may be signs of a grounded or shorted rotor. Perform the ***Exciter Rotor Resistance and Ground Test Procedure (Exciter / Auxiliary Power Alternator)***.
5. Check for evidence of sticking brushes. Sticking brushes will normally result in the slip rings being pitted and discolored from excessive arcing. Another sign of sticking brushes is instability or loss of both weld and auxiliary output, but the machine may begin to work properly, for a short time, after being jarred or moved.

6. If there is any evidence that the brushes may have been sticking in the brush holders, a new brush holder and brush assembly should be installed.

   Cleaning slip rings:

   In the event that the slip rings have become dirty, discolored or mildly pitted, it will be necessary to clean them using very fine (500 or 600 grit) emery cloth or a 220 or 320 grit commutator stone.

   ⚠ CAUTION

   Commutator stones should only be used by experienced technicians who have the knowledge and equipment necessary to use them safely.

   Seating brushes:

   If brushes have been replaced, repositioned, or are not making full contact with the slip rings, it will be necessary to re-seat them. This can be done by placing a strip of 180 grit sandpaper between the slip rings and the brushes, with the abrasive side against the brushes. Pull the sandpaper strip around the circumference of the slip rings in the direction of rotor rotation only. Repeat this procedure until the surface of each brush is in full contact with its matching slip ring.

   Use low pressure compressed air to thoroughly blow the carbon, commutator stone and sandpaper dust from the machine before operating.

   Securely connect the leads to the brush terminals (See Wiring Diagram) and replace the alternator cover if testing and service is complete.

Figure F.7 – Brush locations

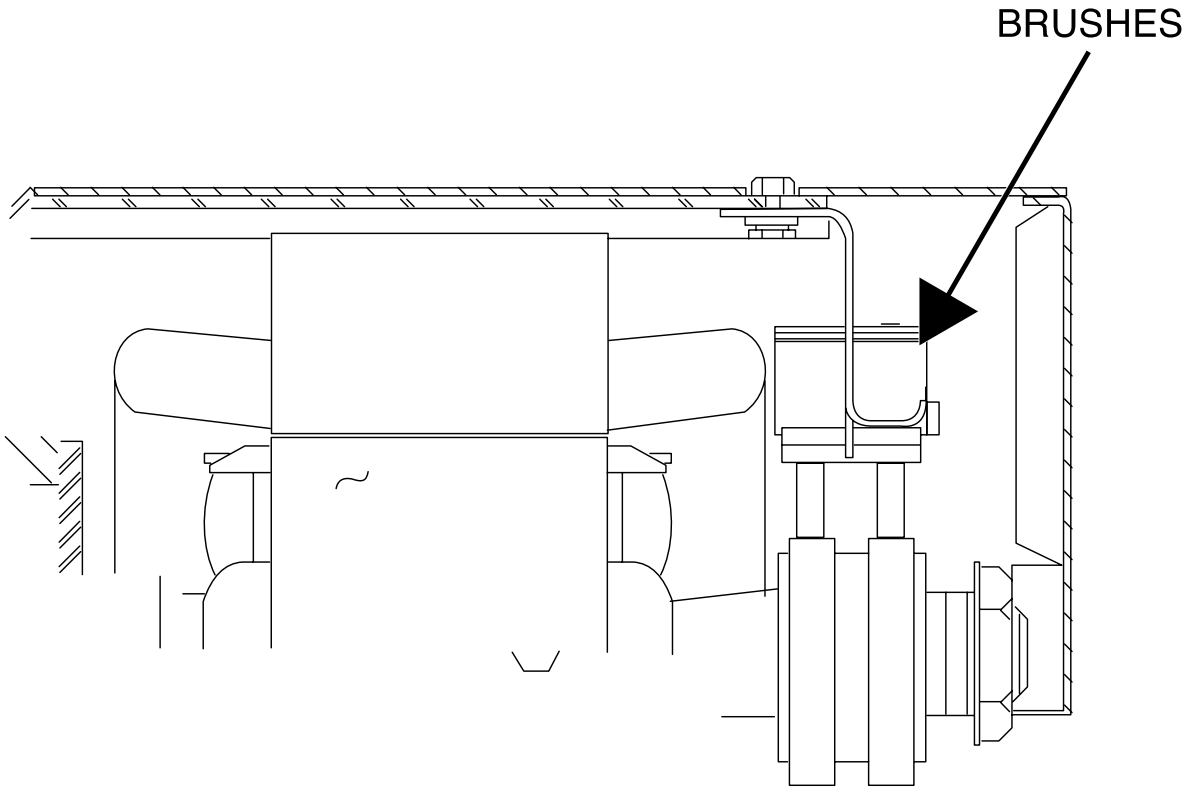

EXCITER ROTOR VOLTAGE TEST PROCEDURE

Service and repair should be performed by only Lincoln Electric factory trained personnel. Unauthorized repairs performed on this equipment may result in danger to the technician or machine operator and will invalidate your factory warranty. For your safety and to avoid electrical shock, please observe all safety notes and precautions detailed throughout this manual. If for any reason you do not understand the test procedures or are unable to perform the test/repairs safely, contact the Lincoln Electric Service Department for electrical troubleshooting assistance before you proceed. Call 1-888-935-3877.

TEST DESCRIPTION

This test will determine if the Exciter Rotor Winding is operating at normal voltage.

MATERIALS NEEDED

Volt/Ohmmeter
Wiring Diagram

TEST PROCEDURE

1. Turn off the engine on the SAE-300 HE machine.
2. The engine and generator should be at normal operating temperature for this test. If the machine is cold, the voltage readings may be slightly higher than specified.
3. Remove the covers from the exciter/auxiliary power alternator by removing the screws securing it.
4. Connect the voltmeter probes to the brush terminals. See ***Figure F.8***. See Wiring Diagram.
   NOTE: On this machine and all other Lincoln Electric DC generator machines, the black exciter lead is positive and the red lead is negative.
5. Start the engine and place the idle switch in the “HIGH” position.
6. Using a volt/ohmmeter, measure the voltage at the brush terminals. See Wiring Diagram. The voltage should be 135 to 145 VDC*.
7. Set the RUN/STOP switch to “STOP”.
   If the meter reading is normal, this test is complete.
   If the voltage measures zero or very near zero, perform the ***Flashing Voltage Test Procedure*** and the ***Exciter Rotor Resistance and Ground Test Procedure (Exciter / Auxiliary Power Alternator)***.
   If voltage is higher than specified, the engine RPM may be too high, or there may be voltage intrusion from one of the higher voltage stator windings to the stator exciter winding. Perform the ***Exciter Stator Short Circuit and Ground Test Procedure***.
   If the voltage is lower than 124, but higher than 6, the engine RPM may be too low, or there may be problems in the windings or other exciter circuit components or connections. Perform the testing described below, under the heading “If the voltage measures about 2 to 4 VDC”
   If the voltage measures about 2 to 4 VDC, the generator is not building-up to normal output even though the flashing circuit appears to be functioning normally. This condition could be caused by one of several failed components or connections. Continue with the following tests.
8. Test the field bridge rectifier.

9. Check the wiring, fuse and terminals connecting the field bridge rectifier to the exciter stator winding. See Wiring Diagram.
10. Perform the ***Exciter Stator Short Circuit and Ground Test Procedure***.
11. Perform the ***Exciter Rotor Resistance and Ground Test Procedure (Exciter / Auxiliary Power Alternator)***.

    When the ***Exciter Stator Short Circuit and Ground Test Procedures*** have been completed, reconnect the leads to the AC terminals of the field bridge rectifier.

    Be sure that there are no loads of any kind across any of the stator windings. The exciter winding should be the only stator winding connected at this time. Examine stator wiring for damage, pinched leads, chafed insulation, etc. If necessary, disconnect and insulate the stator output leads as close to the stator winding as possible. If any leads were disconnected, secure them to prevent damage from moving parts. See Wiring Diagram.
12. Re-start the machine and measure the rotor voltage.

    If the rotor voltage continues to read significantly lower than 124 VDC, the stator is probably defective and should be replaced.

    NOTE: The field bridge rectifier may appear to function normally when tested independently, but may malfunction when placed under the stress of normal operation. For this reason, it is recommended that the bridge rectifier be replaced with a known good component before replacing the stator.

    * Voltages shown in this document are for a machine operating at normal temperature. Voltage readings may be slightly higher if the machine is cold.

Figure F.8 – Exciter rotor voltage test

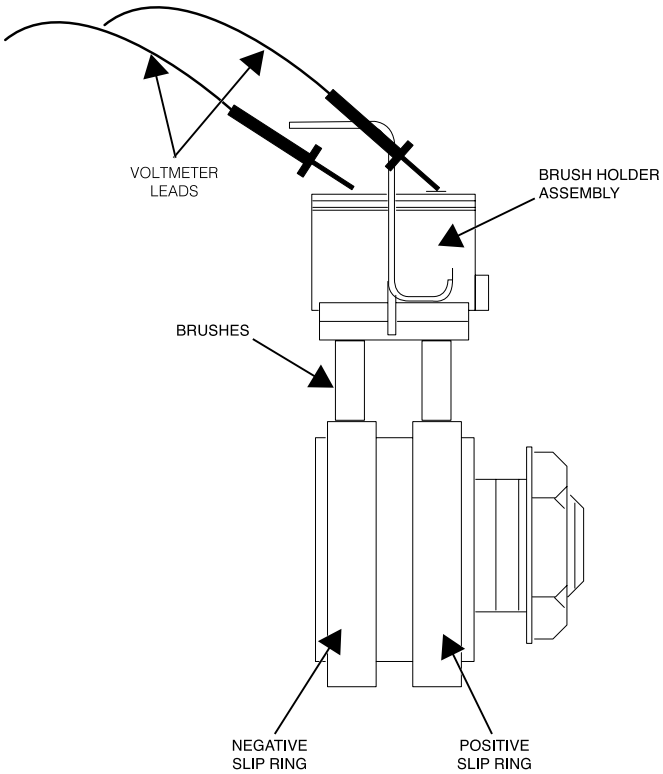

EXCITER ROTOR RESISTANCE AND GROUND TEST PROCEDURE (Exciter / Auxiliary Power Alternator)

Service and repair should be performed by only Lincoln Electric factory trained personnel. Unauthorized repairs performed on this equipment may result in danger to the technician or machine operator and will invalidate your factory warranty. For your safety and to avoid electrical shock, please observe all safety notes and precautions detailed throughout this manual. If for any reason you do not understand the test procedures or are unable to perform the test/repairs safely, contact the Lincoln Electric Service Department for electrical troubleshooting assistance before you proceed. Call 1-888-935-3877.

TEST DESCRIPTION

This test will determine if the Exciter / Auxiliary Power Alternator Rotor Winding is open, shorted, or grounded.

MATERIALS NEEDED

Volt/Ohmmeter (Analog Type Meter Best For Dynamic Resistance Test)
Wiring Diagram

TEST PROCEDURE

Static Tests:

1. Turn off the engine on the SAE-300 HE machine.
2. Lift the left and right side covers and secure them with the hooks provided.
3. Remove the cover from the exciter / auxiliary power alternator by removing the screws securing it.
4. Label and disconnect the leads connected to the rotor brush holder assembly. See Wiring Diagram. Remove the leads to electrically isolate the rotor windings.
5. Using a volt/ohmmeter, measure the rotor winding resistance across the slip rings. Normal resistance is approximately 40* ohms, at 77°F. (25° C.). See ***Figure F.9***.
6. Using a volt/ohmmeter, measure the resistance to ground. Place one meter probe on either of the slip rings. Place the other probe on any good, unpainted chassis ground. The resistance should be very high, at least 500,000 (500k) ohms.
   If the resistance measurements are not as specified the rotor may be faulty and should be replaced.
   If these resistance values are normal, continue testing, using the dynamic rotor resistance and ground test.

   Dynamic Tests:
   (Also referred to as flying resistance test)
   This test checks for faults in the rotor winding, while these windings are being stressed by the mechanical forces encountered during normal operation.
   NOTE: This test is best performed with a good quality analog type ohmmeter. Many digital meters will not provide stable or accurate resistance readings while the rotor is spinning.
   This test requires that the brushes and slip rings are clean, in good condition and are properly

seated. Perform the ***Brush and Slip Ring Service Procedure (Exciter / Auxiliary Power Alternator)***, if necessary.

7. Insulate the lead wires that had been disconnected from the brushes during the static rotor resistance test. Position and secure them so they cannot become damaged by the spinning rotor. It is recommended that the ohmmeter leads be securely attached to the brush terminals, using clips or terminals BEFORE starting the engine. See ***Figure F.9***.
8. Start the engine and run it at high idle speed (1800 RPM). The resistance should read approximately 40 ohms* at 77 deg. F. (25 deg. C).
9. Shut off engine and move one of the ohmmeter leads to a good clean chassis ground connection.
10. Restart the engine and run it at high idle speed (1800 RPM). The resistance should be very high, at least 500,000 (500k) ohms.
11. If the resistance readings differ significantly from the values indicated, re-check the brushes and the brush spring tension. If the brushes and slip rings are good, replace the rotor.
12. When testing is complete, securely connect the leads to the brush terminals, replace the alternator cover and close the left and right side covers. See Wiring Diagram.
    ***NOTE:** The resistance of the copper windings will change with temperature. Higher temperatures will produce higher resistance and lower temperatures will produce lower resistance.

Figure F.9 – Slip ring locations

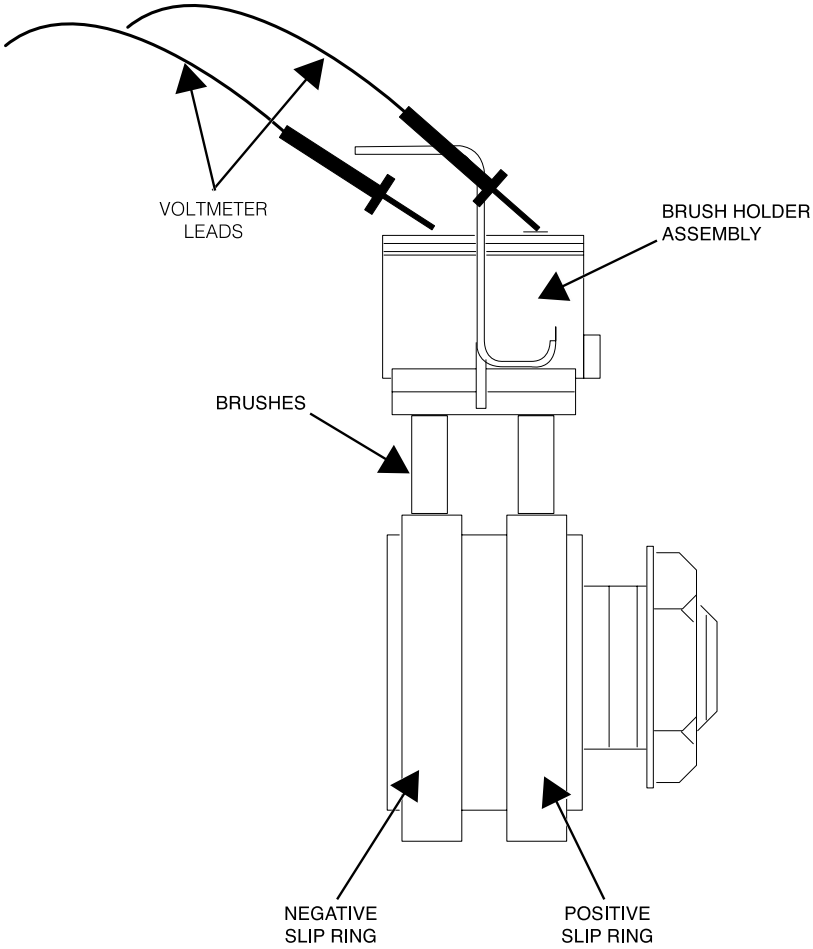

FLASHING VOLTAGE TEST PROCEDURE

Service and repair should be performed by only Lincoln Electric factory trained personnel. Unauthorized repairs performed on this equipment may result in danger to the technician or machine operator and will invalidate your factory warranty. For your safety and to avoid electrical shock, please observe all safety notes and precautions detailed throughout this manual. If for any reason you do not understand the test procedures or are unable to perform the test/repairs safely, contact the Lincoln Electric Service Department for electrical troubleshooting assistance before you proceed. Call 1-888-935-3877.

TEST DESCRIPTION

This test checks the Exciter Rotor Flashing Voltage.

MATERIALS NEEDED

Volt/Ohmmeter
Wiring Diagram

TEST PROCEDURE

1. Turn off the engine on the SAE-300 HE machine.
2. Lift the left and right side covers and secure them with the hooks provided.
3. Remove the 15 Amp fuse from the fuse holder located on the back of the control panel on the right side. (Operator's right when facing the control panel.)
4. Remove the cover from the exciter / auxiliary power alternator.
5. Disconnect any weld cables or power cords.
6. Set the volt/ohmmeter for DC volts and attach the leads to the brush terminals. See ***Figure F.10***.
   NOTE: The negative brush is the one closest to the winding of the exciter and normally has a red wire attached.
7. Place the idle switch in the "High" idle position, start the engine and measure the voltage.
8. If the voltage measures between 3 and 6 volts, the flashing is normal and the test is complete.
9. If the voltage measures zero or very near zero, move the meter leads to the weld output terminals. Measure the voltage and observe the polarity of the DC voltage.
10. If the voltage measures between 3 and 6 volts DC and the polarity is the same as indicated on the weld output terminals, do the following: Check for a faulty flashing/flywheel bridge rectifier. Check for a poor connection between the welding generator brush holders, the flashing/flywheel rectifier, the field bridge rectifier and slip rings. See Wiring Diagram.
11. If the voltage is zero or very near zero, or if the polarity does not match the polarity indicated at the weld terminals, replace the fuse removed in step 3, perform the ***Field Flashing Procedure*** and repeat the above steps.
12. If the ***Field Flashing Procedure*** does not correct the problem, perform the ***Welding Generator Brush And Commutator Inspection And Service Procedure***, the ***Weld Circuit Ground And Short Circuit Test Procedure*** and the ***Shunt Field Coil Resistance Ground Test Procedure***.

13. When testing is complete, attach the previously removed exciter / auxiliary power alternator cover and close the left and right side covers. See Wiring Diagram.

Figure F.10 – Flashing voltage test

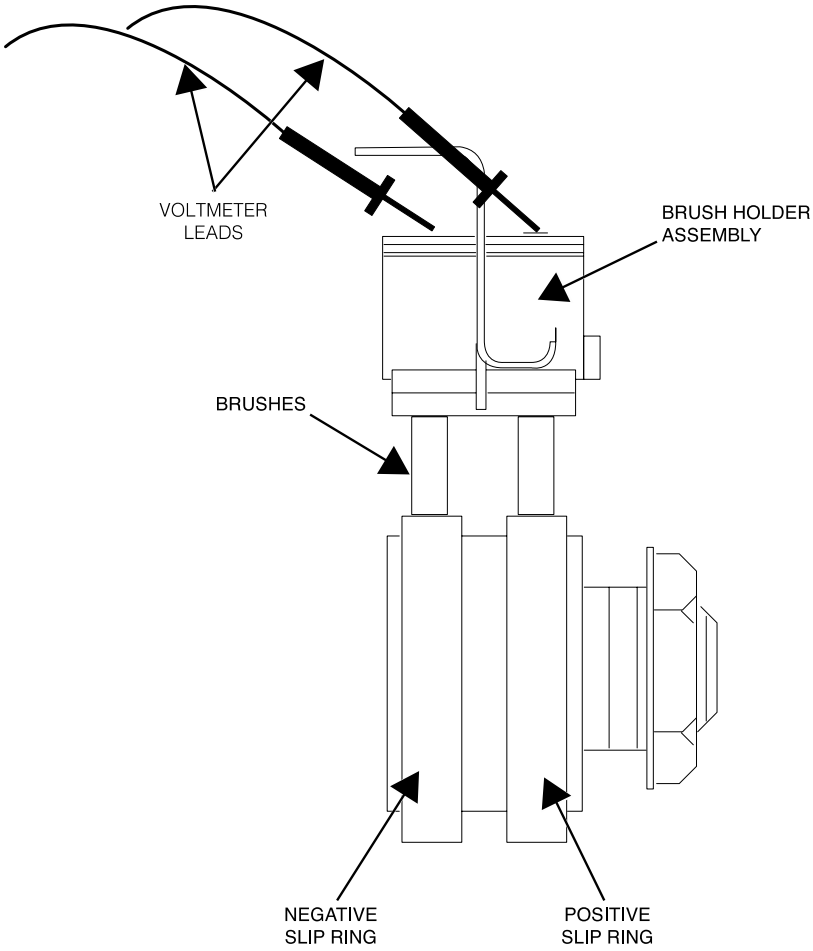

EXCITER STATOR SHORT CICUIT AND GROUND TEST PROCEDURE

Service and repair should be performed by only Lincoln Electric factory trained personnel. Unauthorized repairs performed on this equipment may result in danger to the technician or machine operator and will invalidate your factory warranty. For your safety and to avoid electrical shock, please observe all safety notes and precautions detailed throughout this manual. If for any reason you do not understand the test procedures or are unable to perform the test/repairs safely, contact the Lincoln Electric Service Department for electrical troubleshooting assistance before you proceed. Call 1-888-935-3877.

TEST DESCRIPTION

This test will determine if there are undesirable electrical connections between the Exciter Stator Windings and Chassis Ground or between individual Windings within the Exciter Stator.
This test should be performed if flashing voltage is present at the Rotor Slip Rings, Rotor Resistance, the Field Bridge Rectifier and all associated wiring are proven to be good, but the Exciter Stator output voltage fails to build-up to normal levels, or is too high in one or more of the Windings.

MATERIALS NEEDED

Volt/Ohmmeter
Wiring Diagram

TEST PROCEDURE

1. Turn off the engine on the SAE-300 HE machine.
2. Lift the left and right side covers and secure them with the hooks provided.
3. Make sure that nothing is plugged into the auxiliary receptacles.
4. Disconnect and isolate the ground lead (#820), connected to the neutral side of the 115 VAC auxiliary receptacle. See the Wiring Diagram.
5. Disconnect and isolate the exciter winding leads. Leads #214 and #215. See Wiring Diagram.
6. Using an ohmmeter; check the resistance between the following points. Resistance should read very high, 500,000 (500k) ohms minimum.
   • From chassis ground and one of the exciter winding leads.
   • From chassis ground and one of the neutral terminals of the 115 VAC receptacle (The neutral terminal is the larger of the two slots).
   • From one of the neutral terminals of the 115 VAC receptacle to one of the exciter leads.
   If any of these readings are less than 500,000 (500k) ohms, be certain that the windings are completely dry and check for grounded components or wiring that remain connected to the stator, such as circuit breakers, receptacles, etc. See Wiring Diagram. If necessary, disconnect and isolate the stator leads as close to the stator winding as possible.
   If the low resistance to ground, or between individual stator windings is determined to be within the stator, the stator is defective and should be replaced.
7. When testing is complete, connect any previously disconnected leads and close the left and right side covers. See Wiring Diagram.

WELDING GENERATOR BRUSH AND COMMUTATOR INSPECTION AND SERVICE PROCEDURE

Service and repair should be performed by only Lincoln Electric factory trained personnel. Unauthorized repairs performed on this equipment may result in danger to the technician or machine operator and will invalidate your factory warranty. For your safety and to avoid electrical shock, please observe all safety notes and precautions detailed throughout this manual. If for any reason you do not understand the test procedures or are unable to perform the test/repairs safely, contact the Lincoln Electric Service Department for electrical troubleshooting assistance before you proceed. Call 1-888-935-3877.

TEST DESCRIPTION

This procedure provides guidelines for checking and servicing the Welding Generator Commutator and Brushes.

MATERIALS NEEDED

120-150 Grit Commutator Stone
220-320 Grit Commutator Stone
Wiring Diagram
IMPORTANT: Do not use emery cloth to clean the commutator. Use only sandpaper or a commutator stone.
CAUTION: Stoning the commutator involves pressing an abrasive stone against a spinning commutator. This procedure can be hazardous if done without proper training, tools and protective equipment. Consult the commutator stone manufacturer's instructions before attempting this procedure.

TEST PROCEDURE

1. Turn off the engine on the SAE-300 HE machine.
2. Open either, or both of the side covers and secure them with the hooks provided.
3. Disconnect the negative battery cable. See Wiring Diagram.
4. Remove the sheet metal cover protecting the welder generator brushes.
5. Examine the Commutator.
   Normal appearance:
6. The commutator should appear smooth and have an even brown color where the brushes ride.
   Blackened Commutator:
7. A commutator that appears to have an even black color all around may indicate a grounded armature, shorted weld circuit, a serious overload condition or out-of-adjustment rocker. It could also indicate the use of poor quality brushes or brushes that have been contaminated with oil or some other foreign substance.
   • Check the rocker position. Be certain that it is aligned with or very close to the factory drill mark. See ***Figure F.11***. **IMPORTANT:** If the rocker position requires adjustment, do not over tighten the rocker clamping screw. This screw should be tightened to a torque of 70 to 75 Inch-Lbs. Over

tightening can destroy the rocker.

• Perform the ***Weld Circuit Ground and Short Circuit Test Procedure***.

• If the weld circuit is not grounded or shorted and poor brush quality or contamination is suspected, replace the brushes and seat them with a commutator stone or sandpaper.

• If brush quality or contamination is not suspected, clean the commutator by lightly stoning the surface.

⚠ CAUTION

Stoning the commutator involves pressing an abrasive stone against a spinning commutator. This procedure can be hazardous if done without proper training, tools and protective equipment.
Consult the commutator stone manufacturer's instructions before attempting this procedure.

Pitted and Arc Damaged Commutator:

If pitting and arc damage to the commutator is evident, the machine may have been used with badly worn brushes. The brush spring tension may have been too low, or the brushes may have been sticking in the holders. An out-of-adjustment rocker or a serious overload may also cause this condition.

• Examine the inside of the brush covers and other parts that are close to the commutator. If there is a significant amount of solder and debris that has been thrown from the commutator, the armature will need to be replaced and the stator coils must be carefully examined and tested for damage.

• Perform the ***Weld Circuit Ground and Short Circuit Test Procedure***.

• If the brushes are worn out, replace them and resurface or clean the commutator as needed. If the brush springs appear weak, discolored or damaged in any way, replace them as well. The brush holder plates and retainers should be clean, smooth and undamaged so the brushes can move freely as they wear.

• Check the rocker position. Be certain that it is aligned with or very close to the factory drill mark. See ***Figure F.11***. **IMPORTANT:** If the rocker position requires adjustment, do not over tighten the rocker clamping screw. This screw should be tightened to a torque of 70 to 75 Inch-Lbs. Over tightening can destroy the rocker.

Uneven Commutator appearance:

If the commutator appears to have some normal colored bars and some blackened bars, the armature may be shorted.

• If excessive sparking is observed and/or the weld output is abnormal, the armature should be replaced.

• If the commutator has uneven color, but there is no sign of serious generator performance problems, the commutator may only need to be cleaned by lightly stoning the surface. See caution note on commutator stone usage.

Examine the brushes:

The brushes and springs should all be in place and not be excessively worn. Brushes should be replaced if they are worn to within 1/4" of the pigtail lead.

The pigtail lead of each brush should be positioned so it allows free movement of the brush while it wears.

The brushes should be seated so that the face of each brush makes 95% minimum contact with the commutator. Lightly stone the commutator to seat the brushes. See caution note on commutator stone usage.

Examine the brush holders:

The brush holder insulators must be clean and in good condition and all of the hardware must be in place. See ***Figure F.11***. Replace any insulators that are cracked or damaged in any way.

When installing the brush holders, they should be rotated toward the brush retainer (clockwise rotation when facing the brush holder mounting screw.) until they stop. The edge of the brush holder plate should be parallel with the surface of the commutator and positioned .030 to .090 from the surface of the commutator. The brush holder mounting screw should be tightened to a torque of 24 to 28 Ft Lbs.

The brush holder plate and retainer assembly must be clean and smooth; nothing should prevent free movement of the brushes. All electrical connections to the brush holders must be clean and tight.

The recommended torque for 5/16-18 brush holder connection screws is 8 Ft.-Lbs.

8. When testing is complete, attach the sheet metal cover protecting the welder generator brushes, connect the negative battery terminal and close the left and right side covers.

Figure F.11 – Generator components

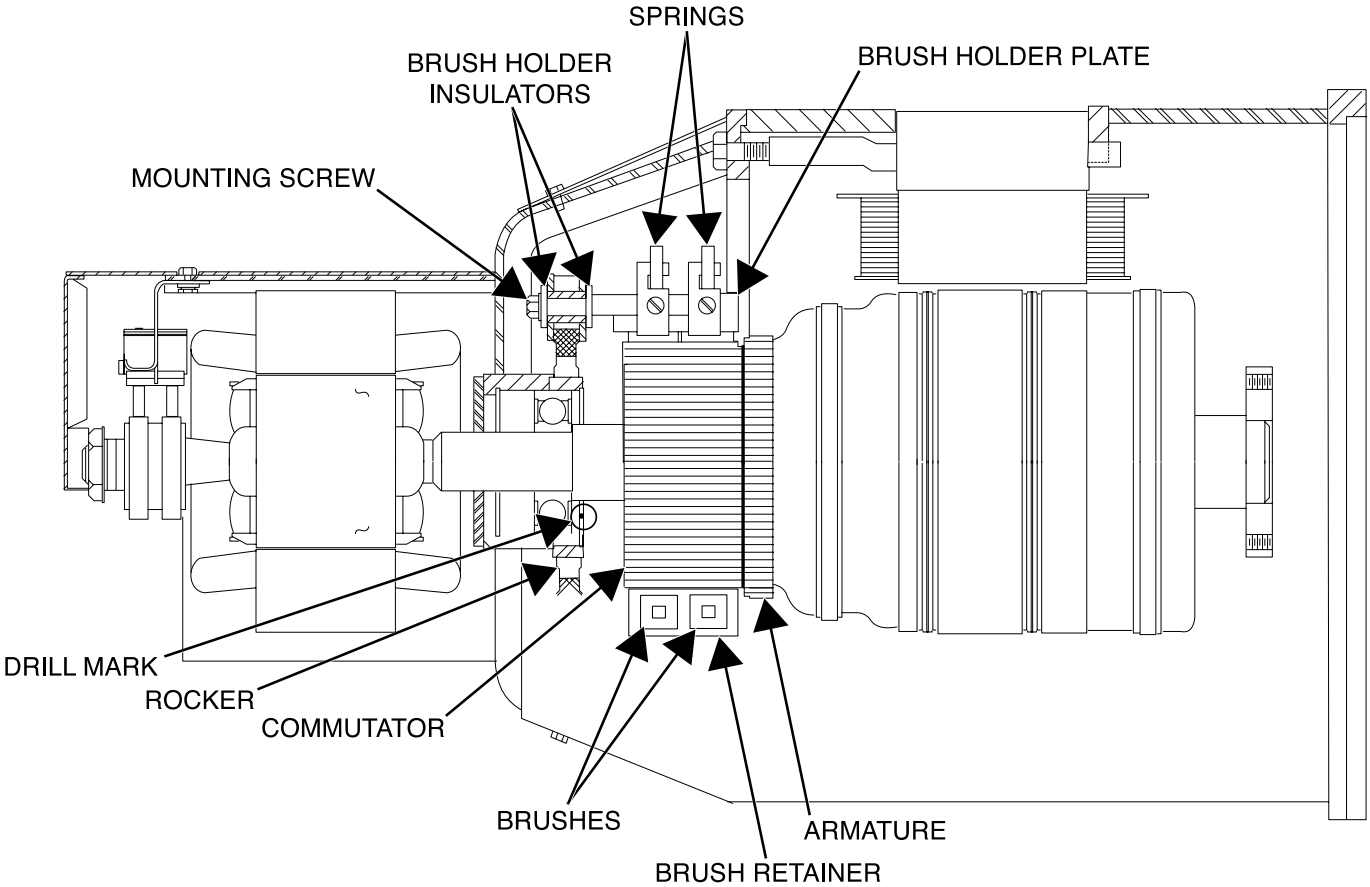

WELD CIRCUIT GROUND AND SHORT CIRCUIT TEST PROCEDURE

Service and repair should be performed by only Lincoln Electric factory trained personnel. Unauthorized repairs performed on this equipment may result in danger to the technician or machine operator and will invalidate your factory warranty. For your safety and to avoid electrical shock, please observe all safety notes and precautions detailed throughout this manual. If for any reason you do not understand the test procedures or are unable to perform the test/repairs safely, contact the Lincoln Electric Service Department for electrical troubleshooting assistance before you proceed. Call 1-888-935-3877.

TEST DESCRIPTION

This procedure checks for grounded components in the Weld Circuit. It also checks for a short circuit condition between the positive and negative components of the Weld Circuit.
This test cannot detect a short circuit within the Armature or a turn to turn short circuit within a Coil or Coil Set.
IMPORTANT: The machine must be clean and completely dry before this test is done.

MATERIALS NEEDED

Volt/Ohmmeter
Wiring Diagram

TEST PROCEDURE

1. Turn off the engine on the SAE-300 HE machine.
2. Open either, or both of the side covers and secure them with the hooks provided.
3. Remove the sheet metal cover protecting the welder generator brushes.
   Weld circuit ground test:
4. Rotate the coarse current control to the minimum output position.
5. Using a volt/ohmmeter, measure the resistance between either of the two weld output terminals and a clean chassis ground connection. See Wiring Diagram.
6. The resistance measurement should be very high 500,000 (500k) Ohms minimum.
   If the resistance is lower than 500k Ohms:
7. Move the output control away from the minimum position and recheck the resistance. If the resistance is now 500k Ohms or greater; check for a damaged or missing insulator bushing at the output control unit.
8. If the resistance is still less than 500k Ohms, remove the welding generator brushes, or pull them away from the commutator and isolate them so they cannot come in contact with anything except the brush holder where they are attached.
9. Label and disconnect plug #P10 from the receptacle #J5 and be certain none of the conductors can come in contact with chassis ground or any other wiring.
10. Using a volt/ohmmeter, measure the resistance between chassis ground and each output terminal and between chassis ground and the commutator.
    If the commutator has low resistance to chassis ground, the armature is defective.

11. If the resistance measured at the positive terminal is low, carefully examine the interpole coils and the heavy leads and the brush holders connected to the interpole coils. Check for damaged, dirty or missing brush holder insulators. Check for a damaged or dirty weld output positive terminal.
12. If the resistance measured at the negative terminal is low, examine the coarse current control unit, the series coils and the heavy leads and brush holders connected to them. Check for damaged, dirty or missing brush holder insulators. Check for a damaged or dirty weld output negative terminal. If necessary, disconnect the coarse current control unit and test it separately. See the ***Coarse Current Control Unit (Variable Reactor) Inspection and Service Procedure***.
13. Test for a short circuit condition between the positive and negative circuits.
14. With the brushes still isolated as described above, check the resistance between the two weld output terminals. The resistance should be very high, 500,000 (500k) Ohms minimum.
15. If the resistance measurement is too low, check the heavy weld current carrying leads and connections for damaged insulation or dirt buildup between the negative (series coils) and positive (interpole coils) circuits. If the low resistance point is between the stator coils, the coils will require replacement or repair.

    Field Flashing Procedure:

    This procedure restores or corrects the residual magnetism in the welding generator. This procedure should be performed if there is no residual voltage output or if the polarity of the residual output is reversed.
16. Turn off the engine on the SAE-300 HE machine.
17. Place the fine current / OCV control to the maximum setting.
18. Connect a DC power source of about 12 Volts to the exciter brush terminals. (The battery works well for this purpose.) Connect the positive lead to the positive brush terminal and the negative lead to the negative terminal and apply the voltage for about 3 to 5 seconds.

    NOTE: If the residual output was present but the polarity was reversed, the above procedure should be used but the voltage used to flash the fields must be at least 24 Volts DC.
19. When all testing is complete, connect any previously disconnected leads, attach sheet metal cover protecting the welder generator brushes and close the left and right side covers. See Wiring Diagram.

SHUNT FIELD COIL RESISTANCE AND GROUND TEST PROCEDURE

Service and repair should be performed by only Lincoln Electric factory trained personnel. Unauthorized repairs performed on this equipment may result in danger to the technician or machine operator and will invalidate your factory warranty. For your safety and to avoid electrical shock, please observe all safety notes and precautions detailed throughout this manual. If for any reason you do not understand the test procedures or are unable to perform the test/repairs safely, contact the Lincoln Electric Service Department for electrical troubleshooting assistance before you proceed. Call 1-888-935-3877.

TEST DESCRIPTION

This procedure will determine if the Welding Generator Shunt Field Coils are open, shorted or grounded
IMPORTANT: The machine should be clean and windings must be completely dry before this test is done.

MATERIALS NEEDED

Volt/Ohmmeter
Wiring Diagram

TEST PROCEDURE

1. Turn off the engine on the SAE-300 HE machine.
2. Open one of the side doors and secure it with the hook provided.
3. Locate the brown and blue wires in the lead bundle exiting at the top of the welding generator frame and disconnect them. See Wiring Diagram.
4. Using a volt/ohmmeter, measure the resistance between the brown and blue wires that connect the shunt coils inside the generator frame. See Wiring Diagram. The resistance should measure about 50 to 54 Ohms* at 77° F (25° C).
5. If the resistance reading is correct, proceed to the Shunt Coil Ground Test.
6. If the resistance is significantly higher or lower than specified, examine the leads connecting the shunt coils and the jumper lead connecting the two coils together. If the leads and connections are undamaged, the shunt coils should be replaced.
   Shunt Coil Ground Test:
7. Using a volt/ohmmeter, measure the resistance between either the brown or blue wires and a good clean chassis ground. See Wiring Diagram. The resistance should be very high. 500,000 (500k) Ohms minimum.
8. If the resistance is low, check the lead wires connected to the shunt coils and the jumper lead wire connecting the two coils together. If these leads are in good condition and the low resistance is determined to be defective coil. The shunt coils should be replaced.
9. Reconnect the wires and replace any covers that have been removed.
   ***NOTE:** The resistance of the copper windings will change with temperature. Higher temperatures will produce slightly higher resistance and lower temperatures will produce slightly lower resistance.

SHUNT FIELD CIRCUIT VOLTAGE TEST PROCEDURE

Service and repair should be performed by only Lincoln Electric factory trained personnel. Unauthorized repairs performed on this equipment may result in danger to the technician or machine operator and will invalidate your factory warranty. For your safety and to avoid electrical shock, please observe all safety notes and precautions detailed throughout this manual. If for any reason you do not understand the test procedures or are unable to perform the test/repairs safely, contact the Lincoln Electric Service Department for electrical troubleshooting assistance before you proceed. Call 1-888-935-3877.

TEST DESCRIPTION

This procedure will determine if the Shunt Field Coils are receiving the necessary power to operate correctly.
This test should be done if there is little or no output from the welding generator, but auxiliary output is normal.

MATERIALS NEEDED

Volt/Ohmmeter
Wiring Diagram

TEST PROCEDURE

1. Turn off the engine on the SAE-300 HE machine.
2. Locate the 12-pin Molex connector in the wire bundle that exits the welding generator fame. See Wiring Diagram.
3. Set the voltmeter for DC voltage and back probe pins #3 and #5, (blue and brown wires) of the 12-pin Molex connector.
4. Set the fine current / OCV control to maximum, set the idle switch to “High” and set the remote/local switch to local position.
5. Start the engine.
6. The voltage should read about 123 to 133 Volts DC (Voltage will be a bit higher if machine is not warmed to normal operating temperature).
   If normal DC voltage is present, perform the ***Shunt Field Coil Resistance and Ground Test Procedure***.
   If voltage is not present, check the rheostat, the remote/local switch, the J5 and P10 Molex connectors. Check all the wiring and terminals connecting the field bridge rectifier, the remote / local switch, the flashing/flywheel rectifier and the J5 - P10 connectors.

DEAD SHORT, 1ST STEP AND OPEN REACTOR TEST PROCEDURES

Service and repair should be performed by only Lincoln Electric factory trained personnel. Unauthorized repairs performed on this equipment may result in danger to the technician or machine operator and will invalidate your factory warranty. For your safety and to avoid electrical shock, please observe all safety notes and precautions detailed throughout this manual. If for any reason you do not understand the test procedures or are unable to perform the test/repairs safely, contact the Lincoln Electric Service Department for electrical troubleshooting assistance before you proceed. Call 1-888-935-3877.

TEST DESCRIPTION

This procedure tests the operation of the Coarse Current Control Unit (Variable Reactor) and the Series Field Coils in the Welding Generator.
This procedure should be done if the low end weld output too low, too high, or varies abnormally and the auxiliary output is normal.

MATERIALS NEEDED

Volt/Ohmmeter
Resistive Load Bank
A Short Length Of Heavy Cable To Short The Output, Or Load Bank With Shorting Contactor
Wiring Diagram

TEST PROCEDURE

1. Turn off the engine on the SAE-300 HE machine.
2. If possible, bring the machine to normal temperature by connecting a load bank and operating the machine at 100% output (250 amps @ 30 volts) for about 30 minutes.
3. Remove the load; turn the Fine Current / O.C.V. Rheostat to MAXIMUM and the Coarse Current Control to MINIMUM (Contacts on the insulated steel filler or “Open Reactor”).
4. Short the output terminals and check that the machine output is 92 to 117 Amps, at 0.2 to 4 Volts DC*.
   If there is no output at the Min. setting of the output control, there is probably an open circuit in the series coils or the conductors connecting them. See the Wiring Diagram.
   A high output when the reactor is set to Min. would indicate a possible short in the series coils. See the Wiring Diagram.
5. Begin rotating the coarse current control unit until the output current changes, this is the first step or first turn of the reactor coil. See ***Figure F.12***. The output should measure 140 to 185 Amps, at 0.2 to 4 Volts DC*.
   A slightly high reading in the Min. position, with no clear first step jump in output could indicate that the contacts are badly worn and the contact fingers, rather than the contacts themselves, may be making contact with the output control winding. Perform the ***Coarse Current Control Unit (Variable Reactor) Inspection and Service Procedure***.
   No change in the output as the coarse current control unit is slowly increased to the first step would

indicate an open coarse current control unit, an open choke (perform the ***Choke Test Procedure***) or an open in the cables connecting to it. See Wiring Diagram and perform the ***Coarse Current Control Unit (Variable Reactor) Inspection and Service Procedure***.

* These values will be accurate if machine is operating at normal temperature. If the machine is cold, the values will be higher.

Figure F.12 – Course current control unit

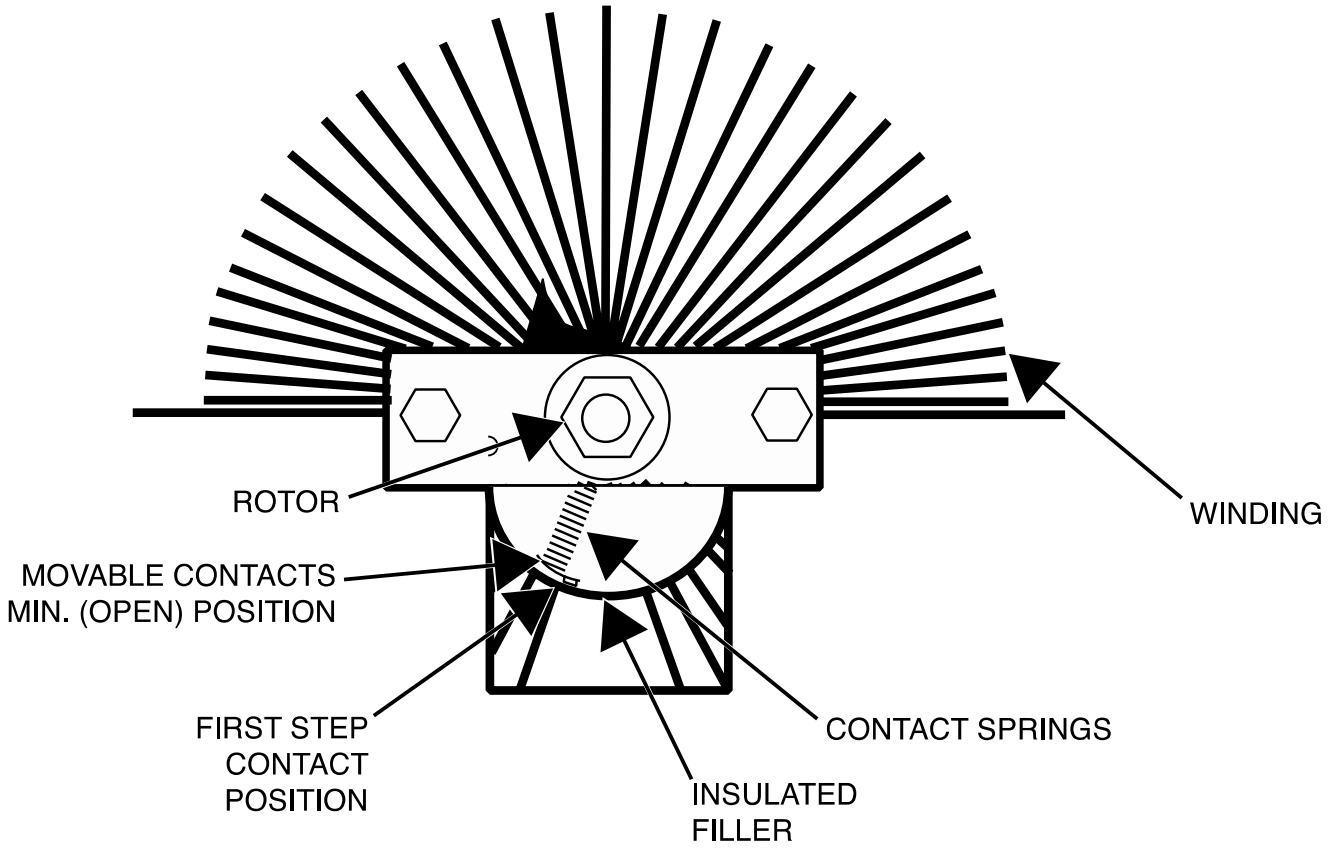

ROCKER ADJUSTMENT PROCEDURE

Service and repair should be performed by only Lincoln Electric factory trained personnel. Unauthorized repairs performed on this equipment may result in danger to the technician or machine operator and will invalidate your factory warranty. For your safety and to avoid electrical shock, please observe all safety notes and precautions detailed throughout this manual. If for any reason you do not understand the test procedures or are unable to perform the test/repairs safely, contact the Lincoln Electric Service Department for electrical troubleshooting assistance before you proceed. Call 1-888-935-3877.

TEST DESCRIPTION

The Rocker is the part of the Welding Generator that supports and positions the 4 sets of Brushes. Its position can be adjusted to fine tune the weld output and influence the weld characteristics.
IMPORTANT: The Rocker is set at the factory for the best overall performance and long Generator and Brush life. Altering this adjustment is normally not recommended unless one or more of the Welding Generator components affecting this setting have been replaced. In very unusual situations, very small adjustments of the Rocker may be beneficial if the machine is operating within the specified limits, but the arc characteristics are unsatisfactory for the desired application.
CAUTION: Improper Rocker adjustment can result in poor performance, reduced Brush life and damage to the Welding Generator. This adjustment should only be attempted by an experienced professional.

MATERIALS NEEDED

Resistive Load Bank, Capable Of Absorbing At Least A 300 Amp Load
Volt/Ohmmeter
Ammeter, Able To Read At Least 300 Amps
Drill With 1/8” Bit
Tachometer Or Frequency Meter

TEST PROCEDURE

1. Turn off the engine on the SAE-300 HE machine.
2. Open the side covers and secure them with the hooks provided.
3. Remove the cover from the exciter / auxiliary power alternator.
   The factory set point drill marks:
4. When the rocker is set for the first time at the factory, a 1/8” drill is used to mark the position of both the rocker and the exciter bracket. See ***Figure F.13***.
   If a machine is not operating within the specified limits and nothing else appears to be faulty, the rocker position should be checked. If the drill marks are not aligned, the rocker and/or the exciter bracket should be reset to the original factory position.
   If it has been determined that a rocker adjustment is necessary on an unaltered machine; the rocker should only be moved in very small increments and the total movement should be no more than 1/2 the diameter of the drill mark.

Setting the Rocker - If the factory drill mark is missing or invalid due to component replacement.
IMPORTANT: The following procedures should only be attempted if all the other systems have been thoroughly checked and are functioning normally.
A tachometer will be required for this phase of the test.
Initial rocker placement:

5. The rocker should be initially positioned so the center of brushes visually lines up with the center of the main poles. Lining up the four brush holder studs with the four exciter bracket mounting bolts is acceptable for initial placement. The rocker should be tight against the shoulder of the hub and the clamping screw should be tightened only enough to assure the rocker can not move.
   IMPORTANT: DO NOT OVER TIGHTEN. Over tightening the rocker clamp screw can destroy the rocker.
6. Check that the brush holders are properly installed and positioned correctly. See the ***Welding Generator Brush and Commutator Inspection and Service Procedure***.
7. Start the engine, place the idle switch in the high idle position and seat the brushes using a commutator stone. See the ***Welding Generator Brush and Commutator Inspection and Service Procedure***.
8. Using a load bank, apply a 100% duty cycle load (250 amps @ 30 volts). Look at the brushes while the load is applied. If excessive sparking is observed, adjust the rocker position to minimize sparking. Generally, moving the rocker slightly in the direction of the armature rotation will reduce sparking.
9. Continue running the machine under load for at least 30 minutes to bring the machine up to normal operating temperature and to fully seat the brushes.
   Check for Max output:
10. Remove the load, set the output control and rheostat to maximum, re-apply the load and adjust the load bank to apply a 300 Amp load to the machine.
    WARNING: Do not move the coarse current control while the machine is under load.
11. Measure the output voltage, it should read a minimum of 32 Volts DC.
12. Measure the engine RPM, it should measure between 1650 and 1800 RPM.
13. If the engine high idle RPM is normal, but the load RPM is significantly less than specified above, the engine or governor may be malfunctioning. Have the engine serviced or repaired by a qualified engine technician.
14. If the weld output voltage is lower than specified above, the rocker position will need to be adjusted.
15. Generally, moving the rocker opposite the armature rotation direction will increase output voltage. When making this adjustment, the rocker should only be moved in very small increments. The adjustment may need to be repeated several times to achieve the desired result.
16. Remove the load and check the voltage at the output studs (OCV). The voltage should measure 90 Volts DC.
17. After the rocker has been adjusted and the machine is operating normally, the rocker locking screw should be tightened to 70-75 Inch-Lbs.
18. If new parts had been installed, the new rocker and/or exciter bracket location should be marked with a 1/8” drill mark. See ***Figure F.13***.
19. When testing is complete, attach any previously removed covers.

Figure F.13 – Rocker w/marks

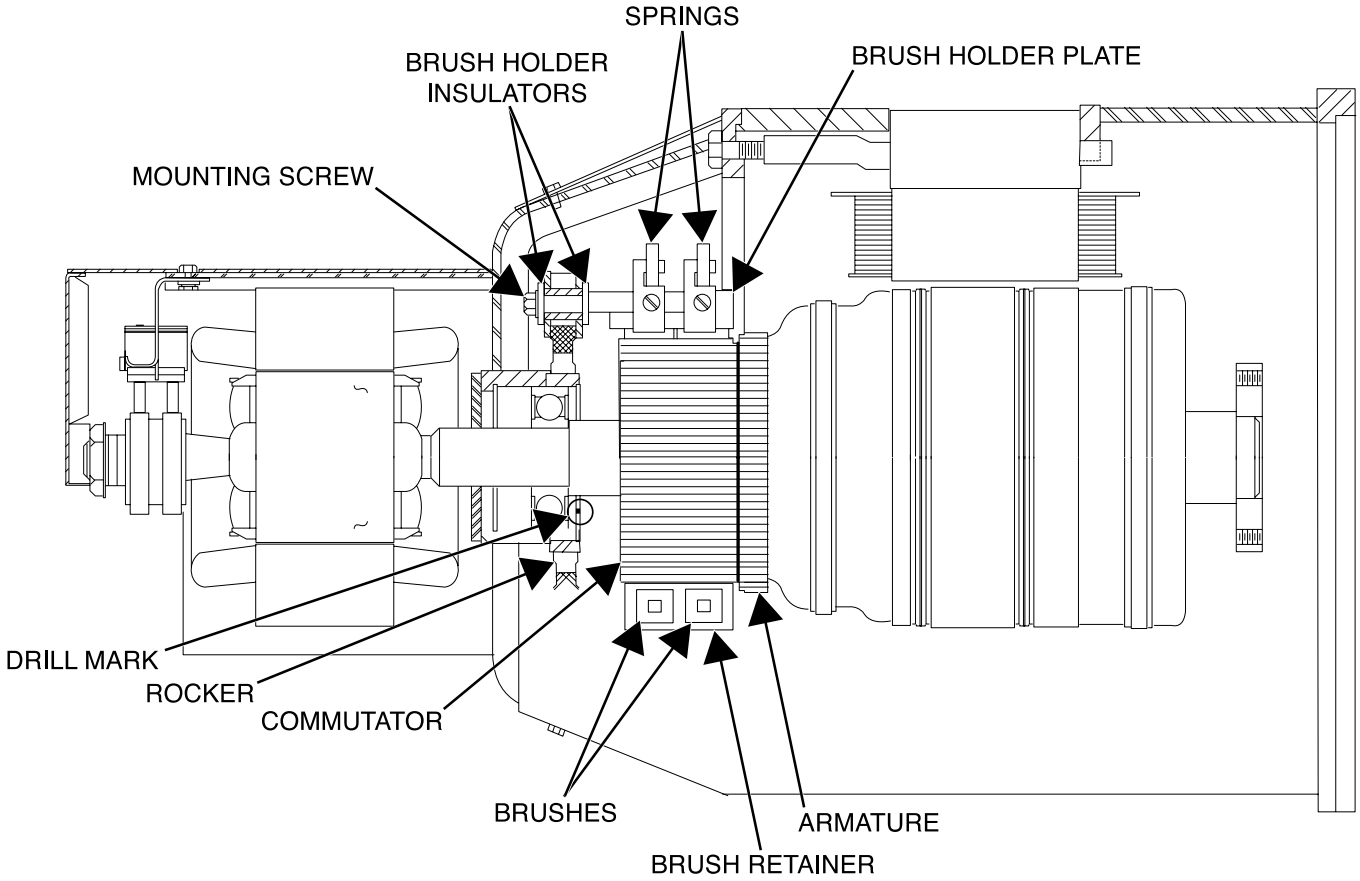

COARSE CURRENT CONTROL UNIT (VARIABLE REACTOR) INSPECTION AND SERVICE PROCEDURE

Service and repair should be performed by only Lincoln Electric factory trained personnel. Unauthorized repairs performed on this equipment may result in danger to the technician or machine operator and will invalidate your factory warranty. For your safety and to avoid electrical shock, please observe all safety notes and precautions detailed throughout this manual. If for any reason you do not understand the test procedures or are unable to perform the test/repairs safely, contact the Lincoln Electric Service Department for electrical troubleshooting assistance before you proceed. Call 1-888-935-3877.

TEST DESCRIPTION

This Coarse Current Control unit, also known as a Variable Reactor, functions like a very high current, highly specialized rheostat. It works together with the Series Coils in the Generator to regulate the weld output and the weld output volt/amp curve.
This procedure should be performed if a visual inspection of the unit indicates excessive wear, dirt, or damage. It should also be performed if the Coarse Current control unit fails a ground test, or if called for in the dead short, 1st step, or open reactor tests. It should also be done if the weld output is low or erratic and the auxiliary output is normal.

MATERIALS NEEDED

400 to 600 Grit Sandpaper
Volt/Ohmmeter
Wiring Diagram

TEST PROCEDURE

1. Turn off the engine on the SAE-300 HE machine.
2. Open the side covers and secure them with the hooks provided.
3. Disconnect the negative battery cable. See Wiring Diagram.
4. Remove the roof and doors.
5. Inspect the coarse current control unit:
6. Carefully examine the unit. Check for arc damage, missing or broken springs, burned and/or badly worn contacts. Also look for missing or damaged insulators, poor lead connections and damaged lead insulation. If there is serious damage to the inside diameter of the winding, the coarse current control unit should be replaced. See ***Figure F.14*** and ***Figure F.15***.
7. Disassemble the coarse current control unit:
   If service is necessary, remove the fuel tank and disconnect the heavy cable attached to the output stud, at the center back on the output control.
8. Remove the coarse current control unit handle.

9. Remove the two screws holding the brush holder stud assembly. Use caution, the shaft is under spring tension. The stud assembly and the rotating brush holder/contact assembly can now be removed through the back of the unit. See ***Figures F.14*** and ***F.15***.

Servicing the coarse current control unit:

10. Clean the coarse current control unit by using low pressure air to remove any excess dust and dirt. If the unit is greasy or oily, a more thorough cleaning will be required. The unit must be clean and completely dry before continuing.
11. Ground test the unit by testing the resistance between the following points:
    - Chassis ground to winding
    - Chassis ground to the insulated steel wedge (at the bottom of continuous output control inside diameter)
    - Insulated steel wedge to the winding. See ***Figure F.15***.

    The resistance should be very high, 500,000 (500k) Ohms min.

    If the resistance is too low, disconnect the remaining connection cable and look for any connection with chassis ground, including any buildup of conductive dirt contacting the winding. Repeat the above resistance tests. If the low resistance is determined to be within the coarse current control unit, it will need to be replaced.

    Use very fine, 400 to 600 grit sandpaper or a cylinder hone to clean away any dirt, oxidation, or minor arc pitting from the output control bore.

Servicing the rotating brush holder and output stud assembly:

Thoroughly clean and inspect the rotating brush holder assembly and the output stud assembly.

12. Examine the insulators on both assemblies. See ***Figure F.16***. Replace any that are worn, damaged or missing. If the shaft insulation tube requires replacement, position the shaft and tube per ***Figure F.17*** and torque the two 5/16-18 Hex head screws to 8 Ft-Lbs.
13. Disassemble the output stud assembly and check the insulating washers and tube. Replace them if they are damaged or worn and re-assemble the output stud assembly. See ***Figure F.16***.
14. Check for grounded output stud and brush holder assemblies by measuring the resistance as follows:

    From the steel shaft to the rotating brush holder.

    From the copper output stud to the output stud bracket.

    The resistance should be very high, 500,000 (500k) Ohms min.

    If any of the contacts on the brush holder assembly are damaged, install all new contacts and new springs.
15. Assemble the flat washer, spring clip and coil spring to the shaft. See ***Figure F.16***.
16. Apply a thin layer of grease to both the output stud and the inside of the brush holder that mates to the output stud. Grease should also be applied to the area around the hole where the shaft passes through the front panel.
17. Insert the brush holder and output stud assembly through the output control unit and through the hole in the front panel. Be sure the output stud bracket is positioned correctly. The insulated stop should be on the left when facing the back on the coarse current control unit.

    The shaft spring will need to be compressed and the bracket drawn close to the back of the coarse current control before the screws can be started and tightened. Locking type pliers and a drift punch can be used to maneuver the bracket into position. Tighten the screws.
18. When testing is complete, connect any previously disconnected cables, install fuel tank, roof and doors. Reconnect the battery cable.

Figure F.14 – Brush & spring

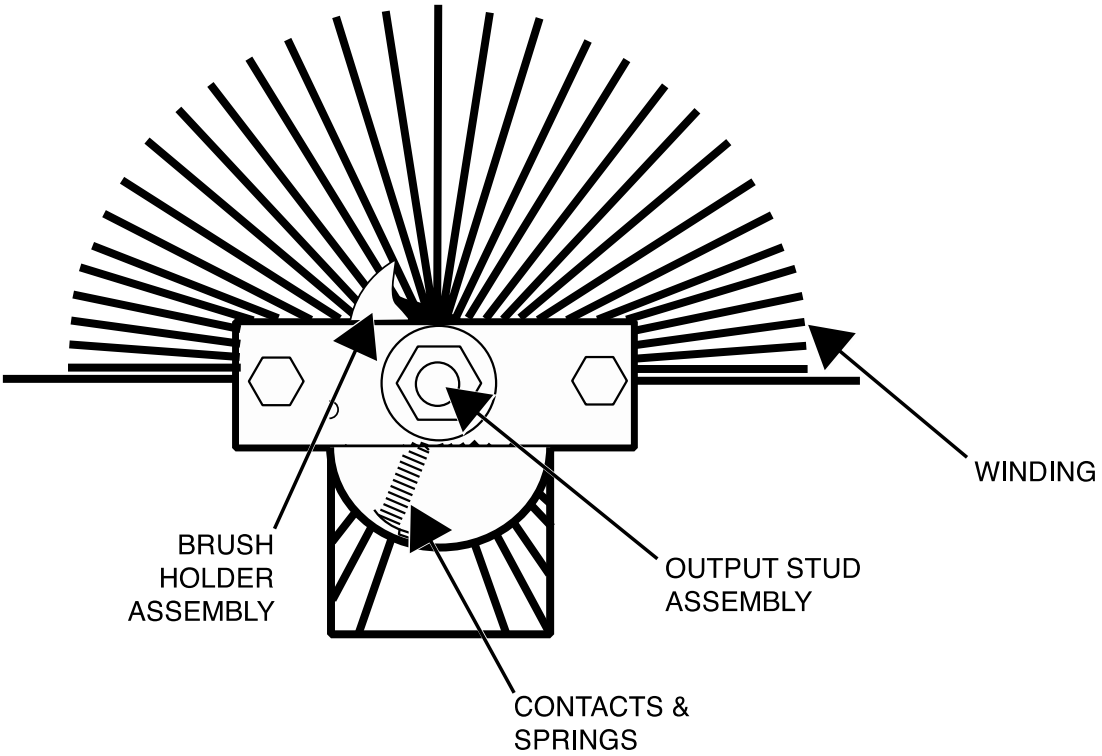

Figure F.15 – Windings & insulated wedge

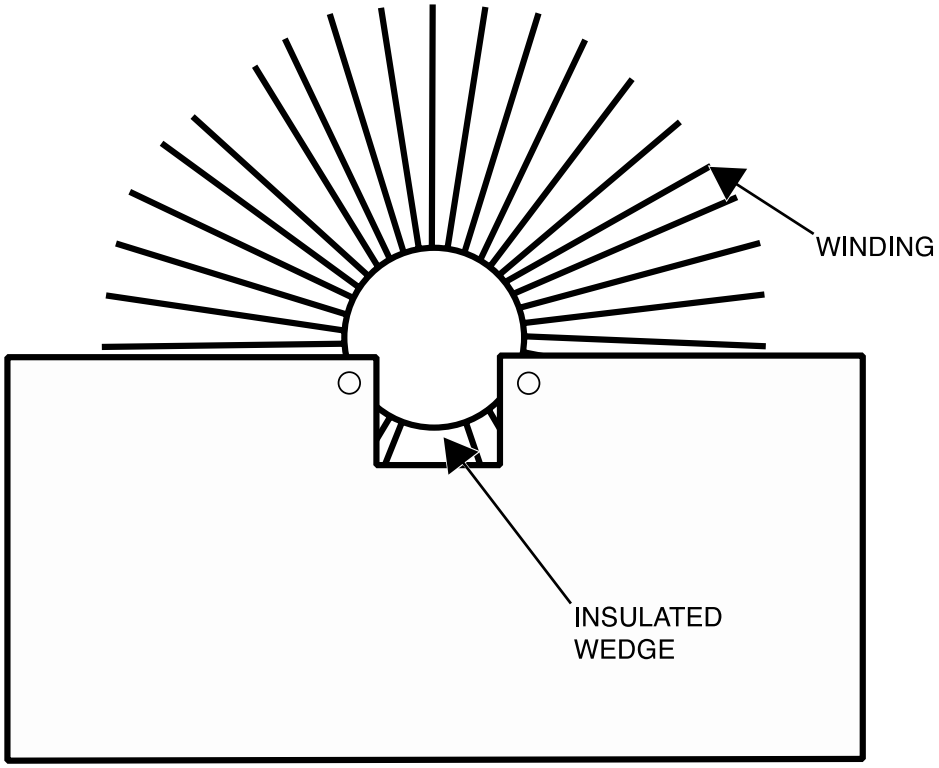

Figure F.1 – Insulator & spring locations

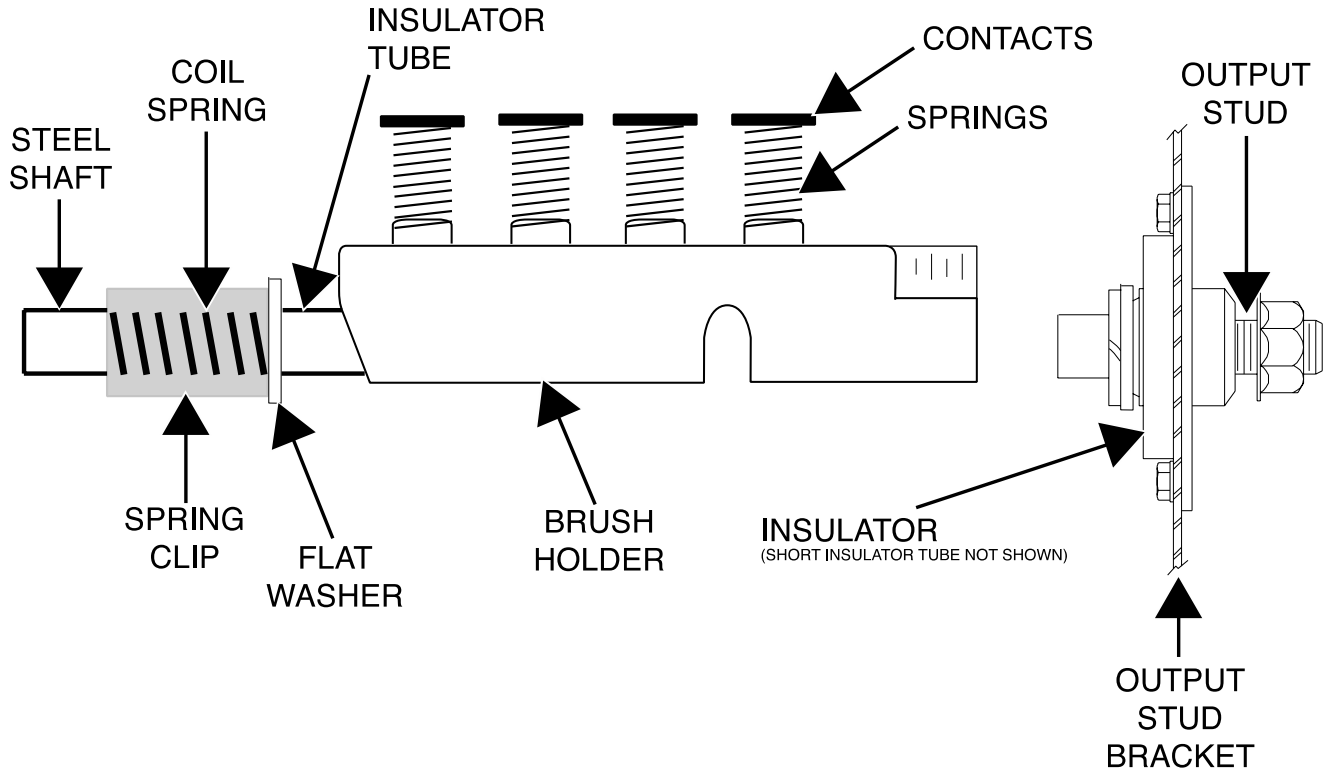

Figure F.2 – Shaft & tube

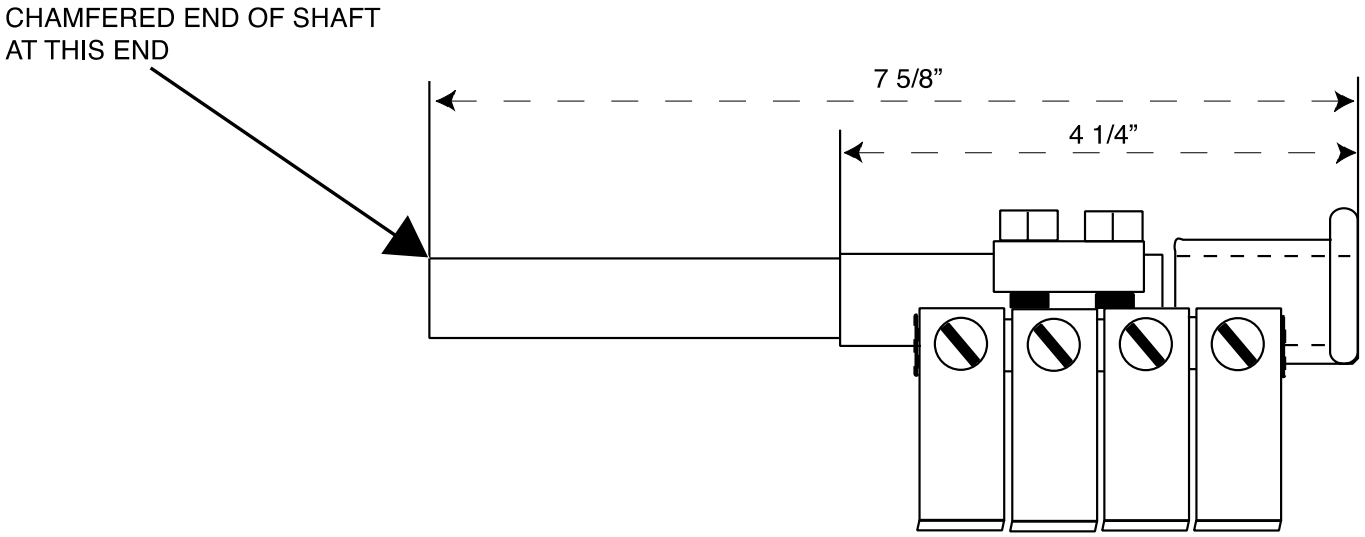

ENGINE GOVERNOR CONTROLLER (EGC) TEST PROCEDURE

Service and repair should be performed by only Lincoln Electric factory trained personnel. Unauthorized repairs performed on this equipment may result in danger to the technician or machine operator and will invalidate your factory warranty. For your safety and to avoid electrical shock, please observe all safety notes and precautions detailed throughout this manual. If for any reason you do not understand the test procedures or are unable to perform the test/repairs safely, contact the Lincoln Electric Service Department for electrical troubleshooting assistance before you proceed. Call 1-888-935-3877.

TEST DESCRIPTION

This test will determine if the Engine Governor Controller (EGC) is functioning properly.

MATERIALS NEEDED

Volt/Ohmmeter
Wiring Diagram

TEST PROCEDURE

1. Turn off the engine on the SAE-300 HE machine.
2. Open the side covers and secure them with the hooks provided.
3. Locate the engine governor controller (EGC) on the left rear side of the front panel. See ***Figure F.18***. See Wiring Diagram.
4. Place the 'Run/Stop' switch into the 'Run' position. Visually observe that the red LED on the engine governor controller briefly illuminates. See ***Figure F.18***. See Wiring Diagram.
5. Place the 'Run/Stop' switch into the 'Stop' position.
6. Using a volt/ohmmeter, perform the tests outlined in ***Table F.1***. See ***Figure F.19***. See Wiring Diagram.
7. If any of the tests fail, the engine governor controller (EGC) may be faulty.
8. If faulty, perform the ***Engine Governor Controller (EGC) Removal And Replacement Procedure***.
9. When testing is complete, close the side covers.

Table F.1 – Electronic governor control (EGC) tests

(POS) TEST POINT	(NEG) TEST POINT	EXPECTED READING	MACHINE CONDITION
PLUG J1 PIN 9	CHASSIS GROUND	12 VDC	RUN/STOP SWITCH IN THE RUN POSITION.
PLUG J2 PIN 7	CHASSIS GROUND	12 VDC	IDLER SWITCH IN THE LOW IDLE POSITION. RUN/STOP SWITCH IN THE RUN POSITION.
PLUG J2 PIN 7	CHASSIS GROUND	MEG OHMS	IDLER SWITCH IN THE LOW IDLE POSITION. RUN/STOP SWITCH IN THE RUN POSITION.
PLUG J2 PIN 7	CHASSIS GROUND	0 VDC	IDLER SWITCH IN THE HIGH IDLE POSITION. RUN/STOP SWITCH IN THE RUN POSITION.
PLUG J2 PIN 7	CHASSIS GROUND	.4 OHMS	IDLER SWITCH IN THE HIGH IDLE POSITION. RUN/STOP SWITCH IN THE RUN POSITION. MACHINE OFF.
PLUG J1 PIN 5	PLUG J1 PIN 8	4.7 VDC	IDLER SWITCH IN THE HIGH IDLE POSITION. MACHINE RUNNING.
PLUG J1 PIN 5	PLUG J1 PIN 8	4.7 OHMS	IDLER SWITCH IN THE HIGH IDLE POSITION. RUN/STOP SWITCH IN THE RUN POSITION. MACHINE OFF.
PLUG J1 PIN 3	PLUG J1 PIN 10	2.6 KHZ	IDLER SWITCH IN THE LOW IDLE POSITION. RUN/STOP SWITCH IN THE RUN POSITION. MACHINE RUNNING.
PLUG J1 PIN 3	PLUG J1 PIN 10	3.2 KHZ	IDLER SWITCH IN THE HIGH IDLE POSITION. RUN/STOP SWITCH IN THE RUN POSITION. MACHINE RUNNING.
PLUG J2 PIN 4	CHASSIS GROUND	2.6 VDC	IDLER SWITCH IN THE HIGH IDLE POSITION. RUN/STOP SWITCH IN THE RUN POSITION. MACHINE RUNNING.

Figure F.3 – Engine governor controller (EGC) location

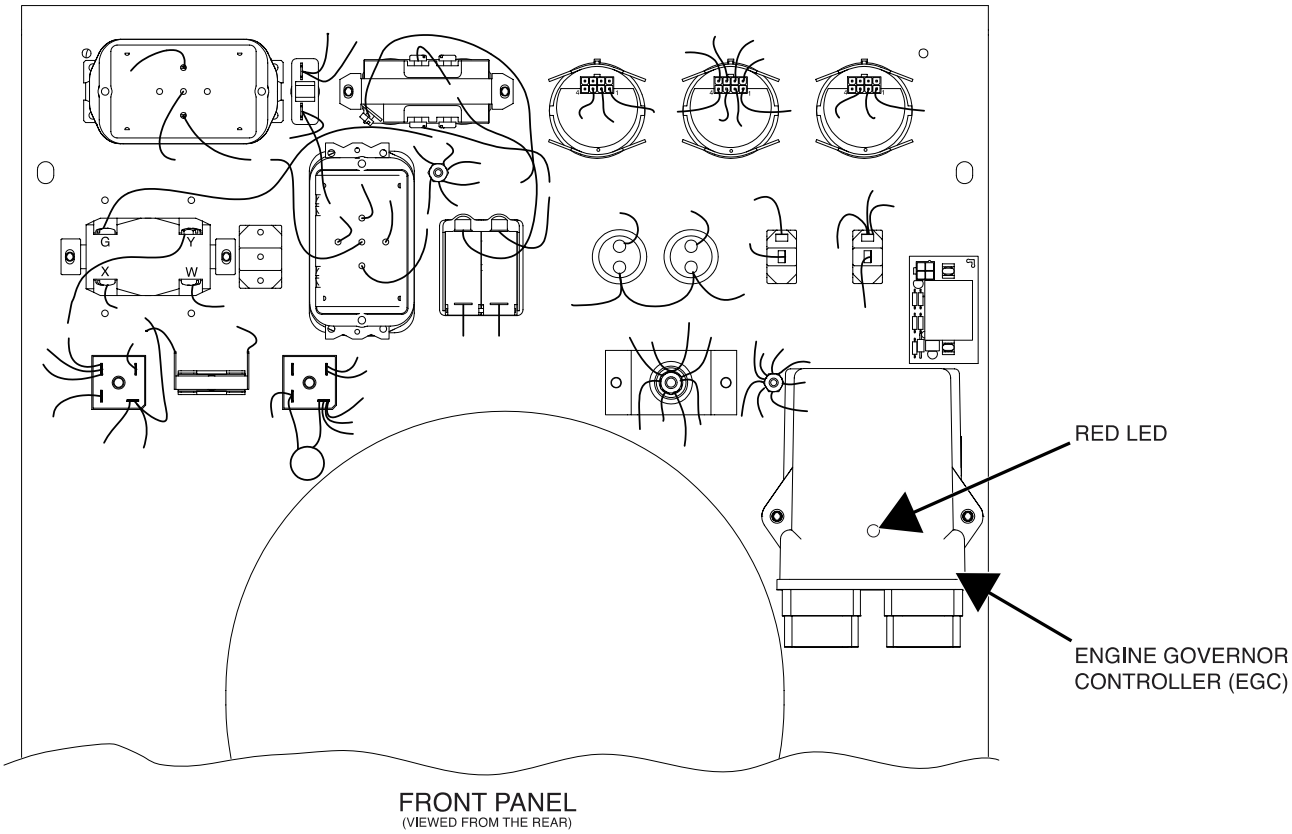

Figure F.4 – Engine governor controller (EGC) plug and pin locations

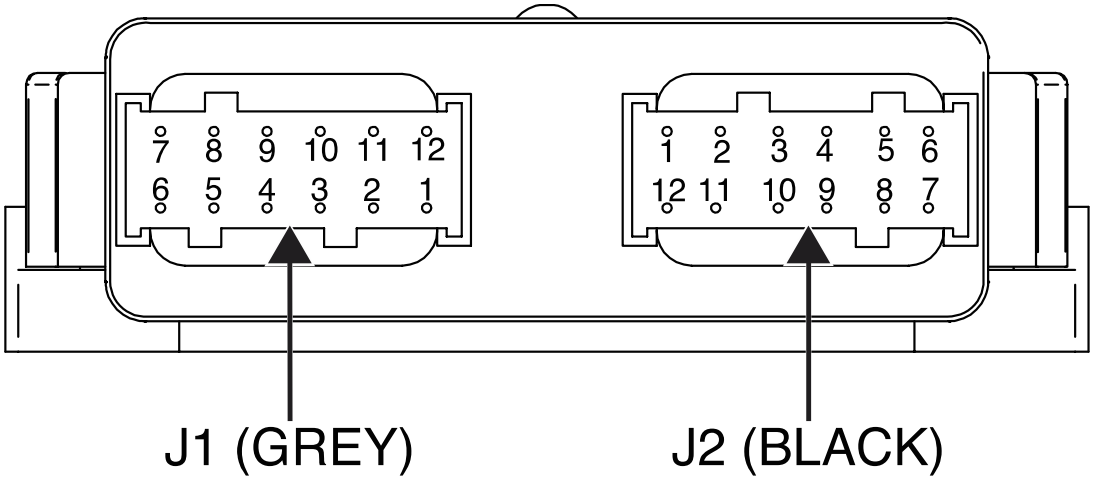

ENGINE ALTERNATOR TEST PROCEDURE

Service and repair should be performed by only Lincoln Electric factory trained personnel. Unauthorized repairs performed on this equipment may result in danger to the technician or machine operator and will invalidate your factory warranty. For your safety and to avoid electrical shock, please observe all safety notes and precautions detailed throughout this manual. If for any reason you do not understand the test procedures or are unable to perform the test/repairs safely, contact the Lincoln Electric Service Department for electrical troubleshooting assistance before you proceed. Call 1-888-935-3877.

TEST DESCRIPTION

This test will determine if the Engine Alternator is functioning normally.

MATERIALS NEEDED

Volt/Ohmmeter
Wiring Diagram

TEST PROCEDURE

1. Turn off the engine on the SAE-300 HE machine.
2. Open the side covers and secure them with the hooks provided.
3. Locate the engine alternator on the back left side of the engine. See Wiring Diagram.
4. Using a volt/ohmmeter, perform the tests outlined below. See Wiring Diagram.
5. Place the 'Run/Stop' switch into the 'Stop' position and test the following points:
   • Chassis ground to the B+ terminal of the alternator (Lead #51), the meter should read battery voltage.
   • Chassis ground to the alternator flash/sense lead (Lead #59). The meter should read 0 volts.
6. Place the 'Run/Stop' switch into the 'Run' position and test the following points:
   • Chassis ground to the flash/sense lead (Lead #59), the meter should read 11.5 to 12.9 VDC during first 30 seconds of operation (This time may be 60 seconds on some models).
7. Start the engine and test the following points:
   • Chassis ground to the B+ terminal of the alternator (Lead #51). The meter should read about 13.5 to 14.2 VDC.
   • Chassis ground to the alternator flash/sense lead (Lead #59). The meter should read about 10 VDC.
8. If the voltages are significantly different from those shown above, check the wiring connected to the alternator for faulty connections or bad insulation. If the wiring is good, the alternator is probably faulty and should be serviced or replaced be replaced.
9. When testing is complete, close the side covers.

CHOKE TEST PROCEDURE

Service and repair should be performed by only Lincoln Electric factory trained personnel. Unauthorized repairs performed on this equipment may result in danger to the technician or machine operator and will invalidate your factory warranty. For your safety and to avoid electrical shock, please observe all safety notes and precautions detailed throughout this manual. If for any reason you do not understand the test procedures or are unable to perform the test/repairs safely, contact the Lincoln Electric Service Department for electrical troubleshooting assistance before you proceed. Call 1-888-935-3877.

TEST DESCRIPTION

This test will determine if the Choke is open, shorted (turn to turn) or grounded.

MATERIALS NEEDED

Volt/Ohmmeter
Wiring Diagram

TEST PROCEDURE

1. Turn off the engine on the SAE-300 HE machine.
2. Open the side covers and secure them with the hooks provided.
3. Locate the choke assembly (attached to the rear of the front panel) and perform the following tests. See Wiring Diagram.
4. **Open:** No weld output. Using a volt/ohmmeter, test the resistance from the top choke terminal to the negative output terminal. See Wiring Diagram. Typical resistance is less than one ohm.
5. **Turn To Turn Short:** Reduced inductance, arc instability, excessive heating of the choke. Check for any physical signs of arcing within the choke assembly. See Wiring Diagram.
6. **Choke Coil Grounded:** Reduced inductance, alternate weld current path. Electrically isolate the choke coil by disconnecting the leads from the top and bottom choke terminals. Using a volt/ohmmeter, check the resistance from choke coil to chassis ground. Resistance should be at least 500,000 ohms. See Wiring Diagram.
7. If any of the tests fail, the choke may be faulty.
8. If faulty, perform the ***Choke Removal And Replacement Procedure***.
9. Connect any previously disconnected leads and close the side covers. See Wiring Diagram.

CURRENT SENSE BOARD TEST PROCEDURE

Service and repair should be performed by only Lincoln Electric factory trained personnel. Unauthorized repairs performed on this equipment may result in danger to the technician or machine operator and will invalidate your factory warranty. For your safety and to avoid electrical shock, please observe all safety notes and precautions detailed throughout this manual. If for any reason you do not understand the test procedures or are unable to perform the test/repairs safely, contact the Lincoln Electric Service Department for electrical troubleshooting assistance before you proceed. Call 1-888-935-3877.

TEST DESCRIPTION

This test will determine if the Current Sense Board is functioning properly.

MATERIALS NEEDED

Volt/Ohmmeter
Wiring Diagram

TEST PROCEDURE

1. Turn off the engine on the SAE-300 HE machine.
2. Open the side covers and secure them with the hooks provided.
3. Locate the current sense board on the left rear side of the front panel. See ***Figure F.20***. See Wiring Diagram.
4. Place the 'Run/Stop' switch into the 'Run' position. See Wiring Diagram.
5. Using a volt/ohmmeter, measure the voltage from current sensor board plug pin 1 to pin 2. Normal reading is 12 VDC. See ***Figure F.21***. See Wiring Diagram.
6. Start the engine on the SAE-300 HE machine.
7. Using a volt/ohmmeter, measure the voltage from current sensor board plug pin 4 to pin 2. Normal reading is 12 VDC with the machine at low idle and less than 1 VDC with the machine at high idle (under load). See ***Figure F.21***. See Wiring Diagram.
8. With the machine running and in low idle, apply a load to the 120 VAC receptacle. The machine should go into high idle automatically.
9. Turn off the engine on the SAE-300 HE machine.
10. If any of the tests fail, the current sense board may be faulty.
11. If faulty, perform the ***Current Sense Board Removal And Replacement Procedure***.
12. When testing is complete, close the side covers.

Figure F.20 – Current sense board location

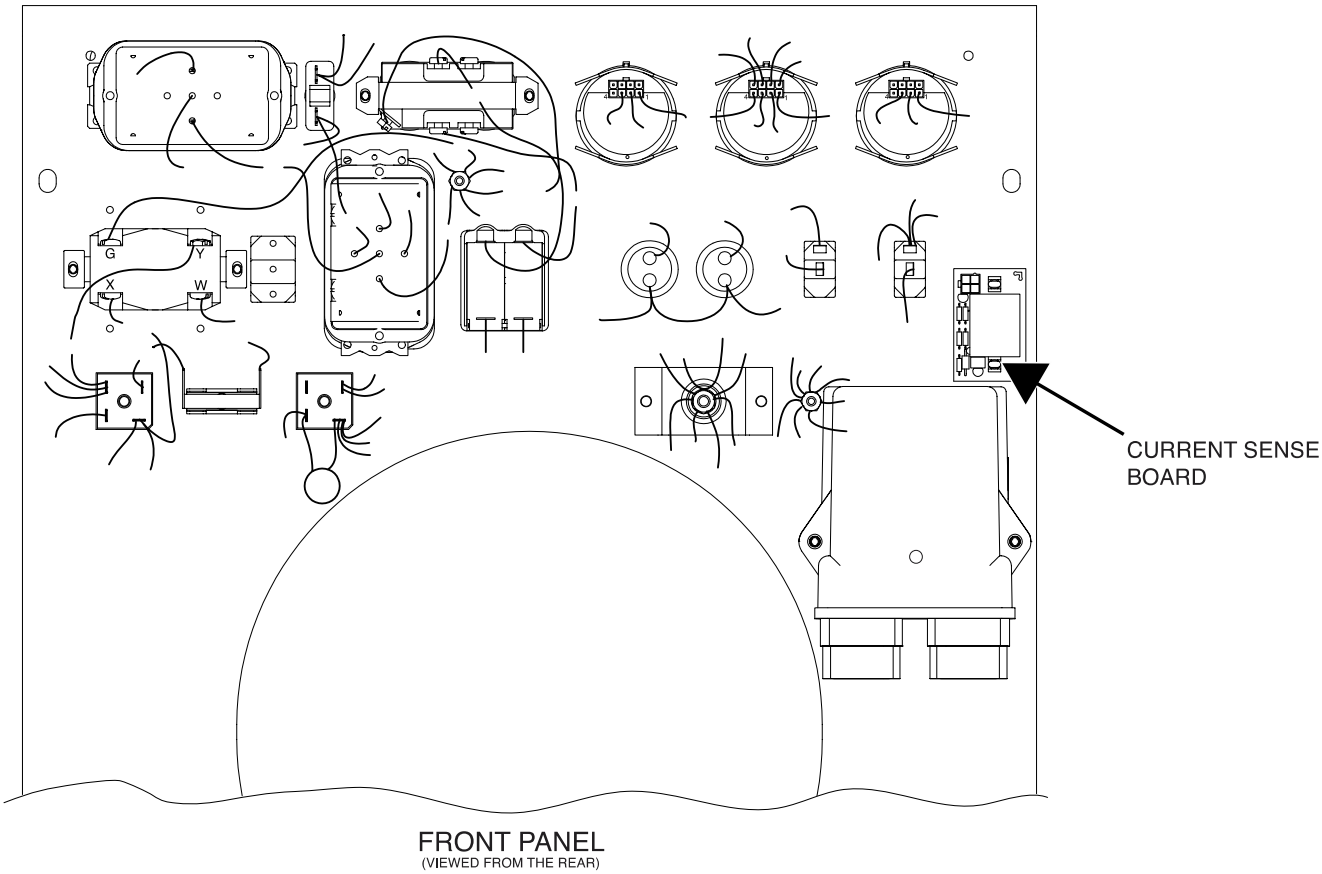

Figure F.21 – Current sense board pin locations

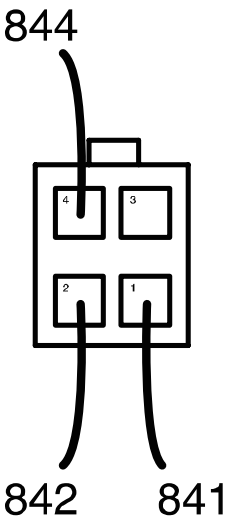

RHEOSTAT TEST PROCEDURE

Service and repair should be performed by only Lincoln Electric factory trained personnel. Unauthorized repairs performed on this equipment may result in danger to the technician or machine operator and will invalidate your factory warranty. For your safety and to avoid electrical shock, please observe all safety notes and precautions detailed throughout this manual. If for any reason you do not understand the test procedures or are unable to perform the test/repairs safely, contact the Lincoln Electric Service Department for electrical troubleshooting assistance before you proceed. Call 1-888-935-3877.

TEST DESCRIPTION

This test will determine if the Rheostat is functioning properly.

MATERIALS NEEDED

Volt/Ohmmeter
Wiring Diagram

TEST PROCEDURE

1. Turn off the engine on the SAE-300 HE machine.
2. Open the side covers and secure them with the hooks provided.
3. Locate the rheostat on the rear of the upper control panel. See ***Figure F.22***. See Wiring Diagram.
4. Label and disconnect leads from the rheostat terminals. See Wiring Diagram.
5. Using a volt/ohmmeter, measure the resistance from the top rheostat terminal to the bottom rheostat terminal. See ***Figure F.22***. See Wiring Diagram. Normal resistance is 64 ohms.
6. Start the engine on the SAE-300 HE machine.
7. Using a volt/ohmmeter, measure the voltage from the top rheostat terminal to the middle rheostat terminal. See ***Figure F.22***. See Wiring Diagram. The voltage should sweep with the movement of the fine current control knob.
8. Turn off the engine on the SAE-300 HE machine.
9. If any of these tests fail, the rheostat may be faulty.
10. If faulty, perform the ***Rheostat Removal And Replacement Procedure***.
11. When testing is complete, close the side covers.

Figure F.22 – Rheostat terminal locations

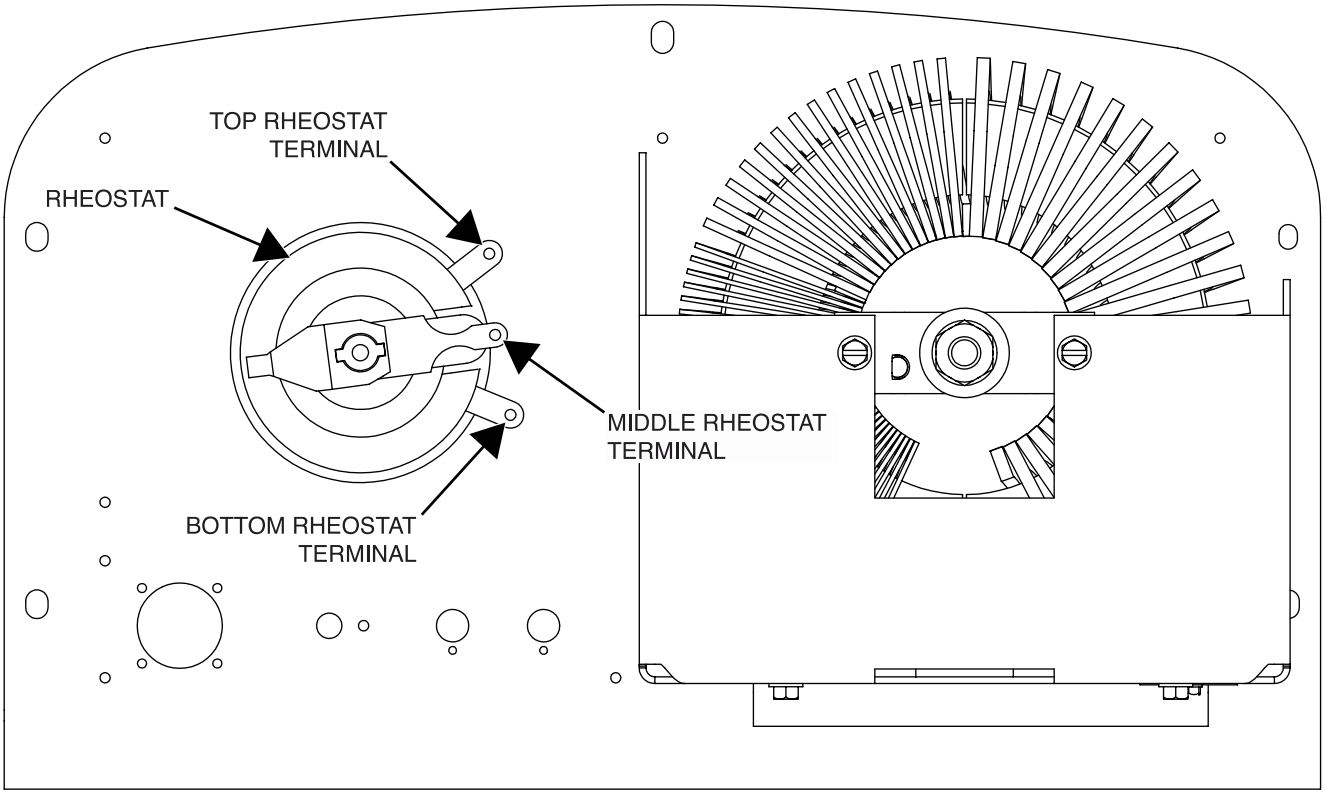

Removal And Replacement Procedures

ALTERNATOR ROTOR REMOVAL AND REPLACEMENT PROCEDURE

Service and repair should be performed by only Lincoln Electric factory trained personnel. Unauthorized repairs performed on this equipment may result in danger to the technician or machine operator and will invalidate your factory warranty. For your safety and to avoid electrical shock, please observe all safety notes and precautions detailed throughout this manual. If for any reason you do not understand the test procedures or are unable to perform the test/repairs safely, contact the Lincoln Electric Service Department for electrical troubleshooting assistance before you proceed. Call 1-888-935-3877.

TEST DESCRIPTION

This procedure will aid the technician in the removal and replacement of the Alternator Rotor.

MATERIALS NEEDED

7/16” Wrench
1/2” Wrench
3/8” Wrench
5/16” Wrench
1-5/8” Socket Wrench
Small Gear Puller
Wiring Diagram

REMOVAL PROCEDURE

1. Turn off the engine on the SAE-300 HE machine.
2. Open the side covers and secure them with the hooks provided.
3. Remove the roof panel.
4. Using a 7/16” wrench, remove the two bolts and washers and partially slide out the battery mounting panel. See ***Figure F.23***.
5. Using a 1/2" wrench, disconnect the negative battery cable. See Wiring Diagram.
6. Using a 3/8" wrench, loosen the screws on the left, right and bottom of the alternator wrap-around. See ***Figure F.24***.
7. Using a 5/16" wrench, remove the 4 screws securing the alternator cover. See ***Figure F.24***.
8. Remove the alternator cover and wrap-around. Be careful to clear the leads.
9. Using a 7/16" wrench, remove the two bolts, nuts and washers mounting the brush holder assembly to the stator frame. See ***Figure F.25***.
10. Bend the flat washer away from the rotor locking nut. See ***Figure F.25***.
11. Using a 1-5/8" socket wrench, remove the rotor locking nut, washer and sleeve collar. See ***Figure F.25***.

NOTE: The sleeve collar will have to be removed with a gear puller. Be careful not to damage the rotor slip ring assembly.

12. Remove the rotor by pulling it free of the generator shaft.

REPLACEMENT PROCEDURE

1. Carefully mount the rotor onto the generator shaft. Install a new sleeve collar (part number T14337), washer and rotor locking nut.
   NOTE: Be careful not to damage or deform the new sleeve collar. Carefully tap the new sleeve collar into position. The rotor locking nut should be torqued to 175 ft.-lbs.
   After the rotor locking nut is properly torqued, bend the washer down over the locking nut.
2. Check rotor air gap, .017" minimum is allowed.
3. Mount the brush holder assembly to the stator frame using two bolts, washers and nuts
   <u>Installing and Seating Exciter Slip Ring Brushes</u>
   a. Make sure the slip rings are clean and free from oil and grease.
   b. With the brushes in place, insert one end of a minimum 24" long piece of 180 grit sandpaper between the slip rings and brushes (abrasive against brushes). Pull the paper around the circumference of the rings in the direction of rotation only. Repeat this procedure until the entire face of the brush is contoured to the radius of the slip ring.
   c. Check the brushes to be certain that there is spring tension holding them firmly against the slip rings.
4. Install the alternator cover and wrap-around.
5. Connect the negative battery cable.
6. Attach the roof panel and close the left and right side panels.
7. Perform the ***Retest After Repair Procedure***.

Figure F.23 – Battery panel removal

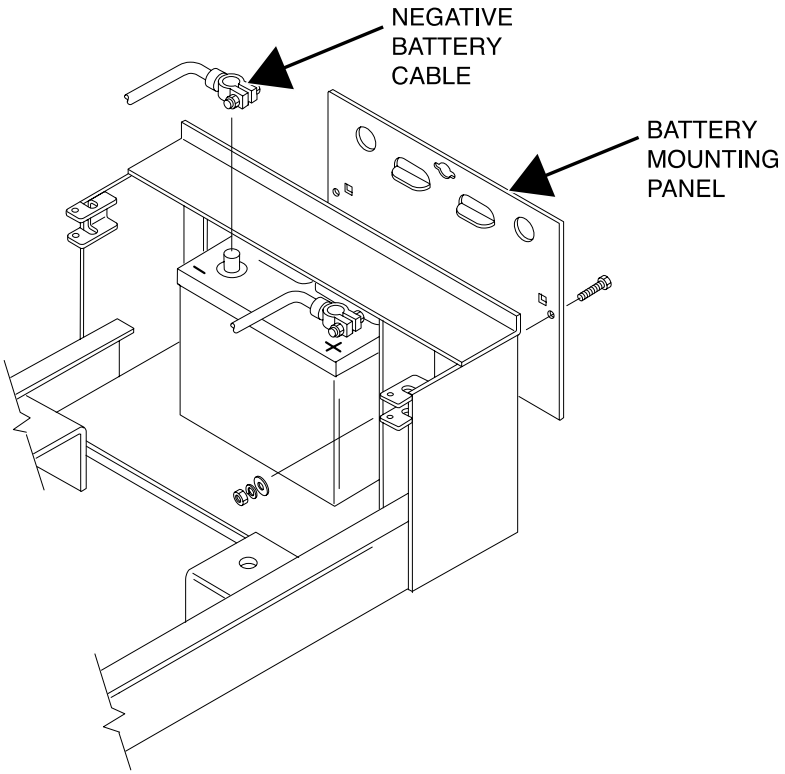

Figure F.24 – Alternator cover and wraparound removal

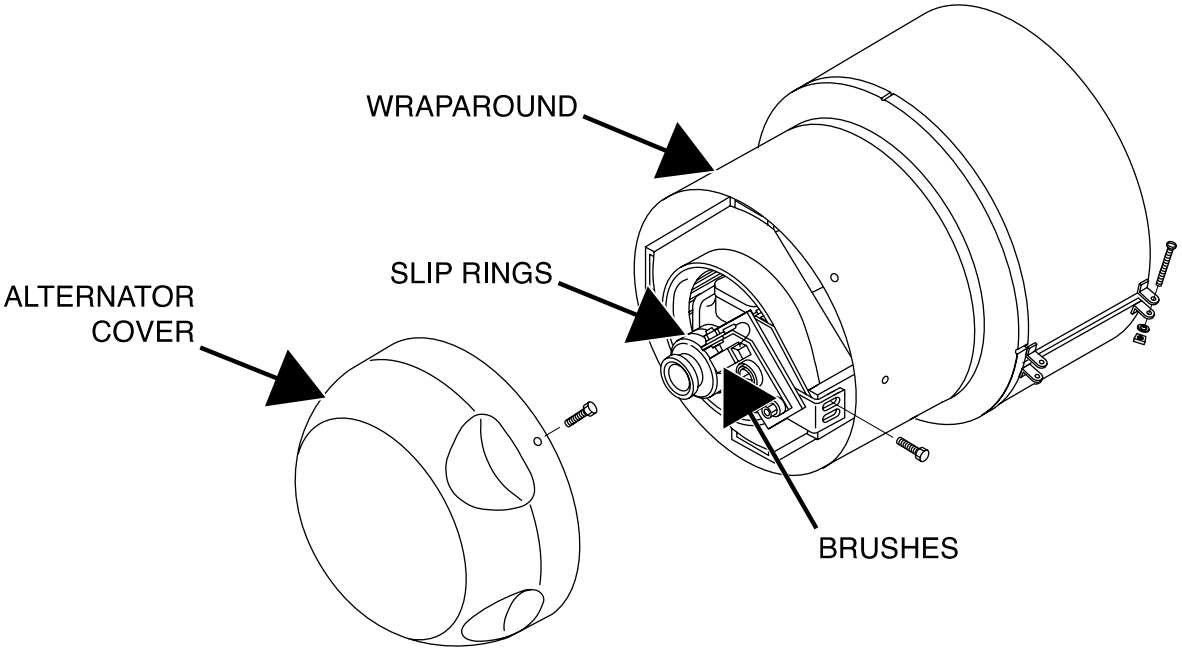

Figure F.25 – Rotor removal

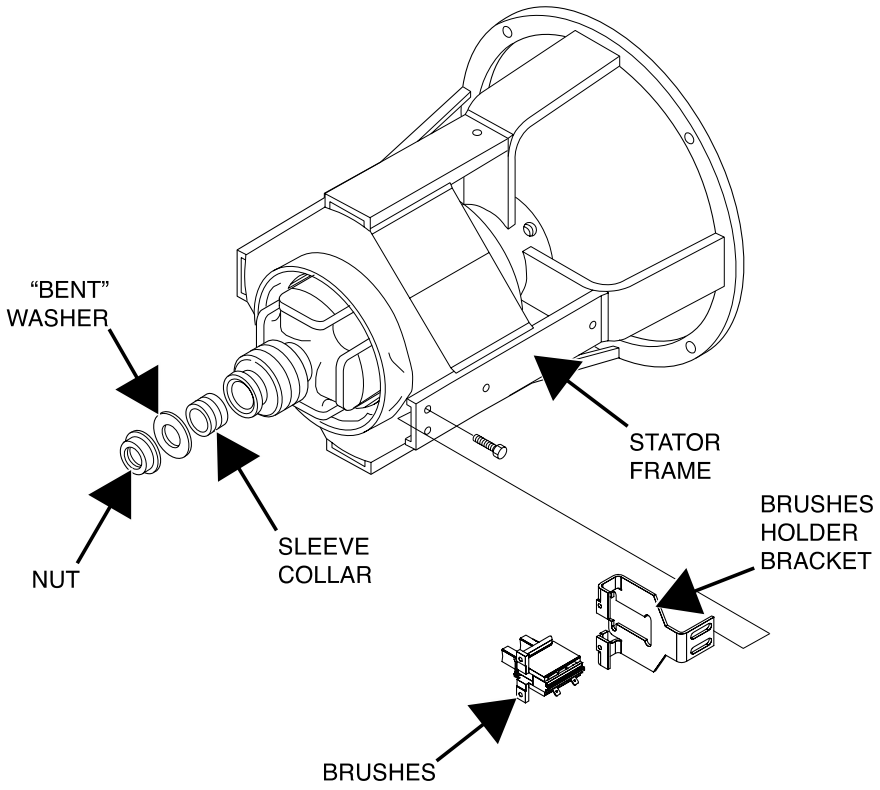

ALTERNATOR STATOR REMOVAL AND REPLACEMENT PROCEDURE

Service and repair should be performed by only Lincoln Electric factory trained personnel. Unauthorized repairs performed on this equipment may result in danger to the technician or machine operator and will invalidate your factory warranty. For your safety and to avoid electrical shock, please observe all safety notes and precautions detailed throughout this manual. If for any reason you do not understand the test procedures or are unable to perform the test/repairs safely, contact the Lincoln Electric Service Department for electrical troubleshooting assistance before you proceed. Call 1-888-935-3877.

TEST DESCRIPTION

This procedure will aid the technician in the removal and replacement of the Exciter Alternator Stator.

MATERIALS NEEDED

Miscellaneous Hand Tools
Pry Bar
Bearing Grease (Chevron SRI or Equivalent)
Wiring Diagram

REMOVAL PROCEDURE

1. Turn off the engine on the SAE-300 HE machine.
2. Perform the ***Alternator Rotor Removal Procedure***.
3. Carefully remove the roof and doors.
4. Using a screwdriver, remove the wrap-around cover protecting the welding generator brushes and commutator. See ***Figure F.26***.
5. Use the wiring diagram to identify all of the wires connected to the alternator stator winding. Carefully mark these leads, for later reassembly and then disconnect them. Cut cable ties as necessary.
6. Lift the eight welding generator brushes from the commutator. Note the position of the brushes for later reassembly.
7. To assure accurate reconnection, carefully mark the heavy leads connected to the brush holders and then disconnect them. To aid in reassembly, note the way these leads are connected, routed and positioned.
8. The front panel of the machine can be unbolted and moved to the side to provide the clearance necessary to remove the exciter stator. This can normally be done by disconnecting only the wires and cutting only the cable ties necessary to allow the front panel to be moved. Most wiring can remain connected. Be sure to carefully mark all of the wires that were disconnected to aid in reassembly.
9. Drain the fuel and store it in an approved container. Disconnect the fuel line from the bottom of the tank and plug the line to avoid getting dirt or other contaminants into the fuel system. Remove the fuel tank and the tank mounting rails.
   Note the drill spots marking the position of the exciter bracket and the rocker. It is very important

that these marks be precisely aligned during reassembly. See ***Figure F.27***.
NOTE: If these drill marks cannot be found, the positions of the rocker and exciter bracket should be clearly marked so these parts can be precisely aligned when the machine is reassembled.

10. Loosen the rocker clamping screw, but do not remove it.
11. Using a hoist, or other appropriate means to support the weight of the exciter frame assembly,
12. Remove the four screws securing the exciter end bracket to the generator frame.
13. Carefully pry the exciter stator/end bracket assembly away from the generator frame.
    NOTE: The welding generator brush holder and rocker assembly will also be removed.

REPLACEMENT PROCEDURE

1. During reassembly, anti-seize compound should be applied to the screw threads.
2. Inspect the mating surfaces of the generator frame and the exciter bracket assembly. These surfaces must mate together completely so it is very important that the surfaces are completely clean and undamaged. The bearing and bearing housing should also be clean and undamaged. Be sure that the rocker assembly is placed on the bearing housing with the locking screw positioned on top.
3. Place some bearing grease in the bearing housing. Chevron SRI or equivalent is recommended.
4. Mount the exciter stator/end bracket assembly to the welding generator frame. Carefully line up the drill spot between the two mating parts. Carefully and evenly tighten the four mounting bolts.
5. Check the armature air gap. At the smallest point, the gap should be wide enough to allow a .035" thick ¼" wide feeler gage to fit between the armature and stator through the entire length.
6. Position the rocker tightly against the hub, align the drill mark and tighten the rocker lock screw to 70 to 75 Inch-Lbs. DO NOT OVERTIGHTEN.
7. Be certain that the brush holders are properly positioned and parallel with the commutator. See the commutator and brush service procedure.
8. Attach the heavy generator leads to the brush holders. Use the notes made during disassembly to assure that the leads are connected and routed correctly. See Wiring Diagram.
9. If the original brushes are used, install them in the same positions that they had been. Form the braided brush leads so they will not interfere with the travel of the brushes as they wear.
10. Reverse the removal procedure to finish reassembling the machine.
11. Replace all the tie wraps that had been removed during disassembly.
12. Replace and connect the battery. Connect the positive cables first, followed by the negative cables.
13. Connect the fuel line and fill the tank. The fuel system may require bleeding. See the engine instruction manual for more information on the fuel system bleeding procedure.
14. Start the engine and seat the brushes using a commutator stone. See the ***Welding Generator Brush And Commutator Inspection And Service Procedure***.
15. Replace the brush and exciter sheet metal covers.
16. Replace the roof and doors.
17. Perform the ***Retest After Repair Procedure***.

Figure F.26 – Generator cover removal

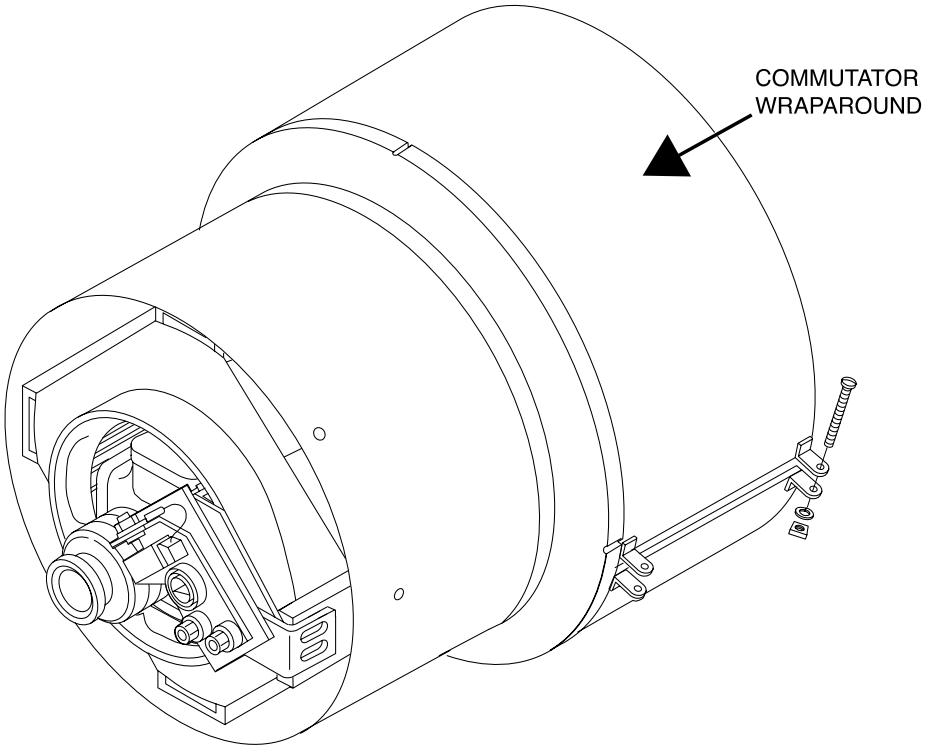

Figure F.27 – Rocker & mark locations

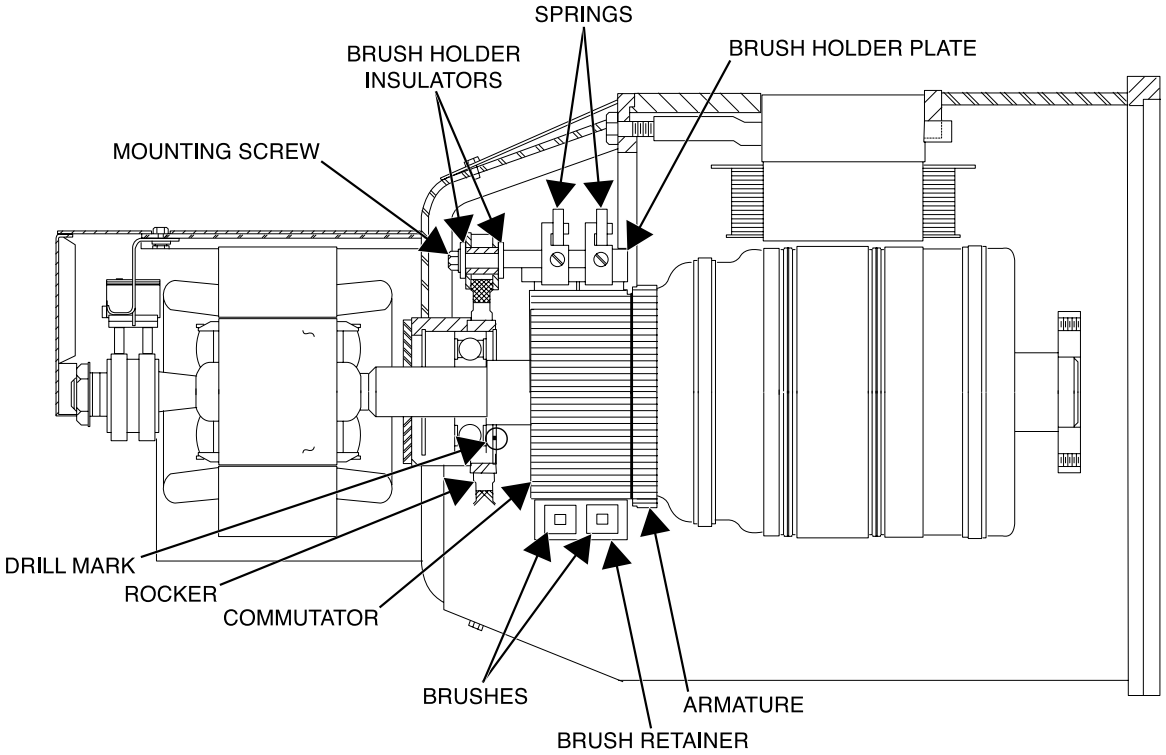

GENERATOR FRAME REMOVAL AND REPLACEMENT PROCEDURE

Service and repair should be performed by only Lincoln Electric factory trained personnel. Unauthorized repairs performed on this equipment may result in danger to the technician or machine operator and will invalidate your factory warranty. For your safety and to avoid electrical shock, please observe all safety notes and precautions detailed throughout this manual. If for any reason you do not understand the test procedures or are unable to perform the test/repairs safely, contact the Lincoln Electric Service Department for electrical troubleshooting assistance before you proceed. Call 1-888-935-3877.

TEST DESCRIPTION

This procedure will aid the technician in the removal and replacement of the Generator Frame Assembly.

MATERIALS NEEDED

Miscellaneous Hand Tools
Wiring Diagram

REMOVAL PROCEDURE

1. Turn off the engine on the SAE-300 HE machine.
2. Perform the ***Alternator Rotor Removal Procedure***.
3. Perform the ***Alternator Stator Removal Procedure***.
4. Label and disconnect all of the wires and cables that connect to the stator/frame assembly. See Wiring Diagram.
5. Remove the mounting bolts from the generator feet.
6. Using a hoist and sling, very carefully lift the generator only enough so the generator frame will clear the welder frame and can be removed. The sling should be positioned near the center of the generator frame.
   Carefully watch the clearance between the engine and any other components while hoisting, especially the clearance between the engine fan, the fan shroud and radiator. Loosen or remove the radiator if necessary.
7. Support the engine at the generator adapter plate end.
8. With the generator frame still supported by the sling (be certain the sling is positioned at the center of gravity of the generator frame) and the weight of the engine resting on the supports that were placed in the previous step, remove the screws securing the generator frame to the engine adapter plate.
9. Carefully pry and wiggle the generator frame to free it from the adapter plate and then slide the generator frame off of the armature. Adjust the height of the stator frame as needed to assure that it can slide off the armature without damage to any of the armature or stator windings.

REPLACEMENT PROCEDURE

1. During reassembly, anti-seize compound should be applied to the screw threads.
2. Carefully inspect the mating surfaces of the engine adapter plate and the generator frame. The mating surfaces must be clean and undamaged.
3. Lift the generator frame with the rope sling and very carefully slide it over the armature. Be very careful that the armature and stator windings are not damaged.
4. Align the bolt holes and install the screws that had been removed earlier. Carefully and evenly tighten them, making sure that the mating surfaces come together cleanly all the way around. Tighten the screws.
5. Remove the supports from the engine and carefully lower the generator frame. Install the rubber mounts.
6. Reverse the removal procedure to reassemble the machine. Be sure to secure all cables and wires. Replace all cable ties that had been removed during disassembly.
7. Perform the ***Alternator Stator Replacement Procedure***.
8. Perform the ***Alternator Rotor Replacement Procedure***.
9. Perform the ***Retest After Repair Procedure***.

GENERATOR ARMATURE REMOVAL AND REPLACEMENT PROCEDURE

Service and repair should be performed by only Lincoln Electric factory trained personnel. Unauthorized repairs performed on this equipment may result in danger to the technician or machine operator and will invalidate your factory warranty. For your safety and to avoid electrical shock, please observe all safety notes and precautions detailed throughout this manual. If for any reason you do not understand the test procedures or are unable to perform the test/repairs safely, contact the Lincoln Electric Service Department for electrical troubleshooting assistance before you proceed. Call 1-888-935-3877.

TEST DESCRIPTION

This procedure will aid the technician in the removal and replacement of the Welding Generator Armature.

MATERIALS NEEDED

Rope Sling
Miscellaneous Hand Tools
Wiring Diagram

REMOVAL PROCEDURE

1. Turn off the engine on the SAE-300 HE machine.
2. Perform the ***Alternator Rotor Removal Procedure***.
3. Perform the ***Alternator Stator Removal Procedure***.
4. Perform the ***Generator Frame Removal Procedure***.
5. Using the rope sling, support the armature. Position the sling at the center of gravity of the armature assembly. See ***Figure F.28***.
6. Remove the eight screws securing the blower paddle segments and the outer diameter of the flexible coupling disk to the flywheel.
7. With the armature securely supported in the sling, unlock it from the flywheel by carefully rotating it 1/8 of a turn in either direction.

REPLACEMENT PROCEDURE

1. Carefully inspect the mating surfaces of the flywheel and armature coupling parts. These surfaces must be clean and undamaged.
2. Support the armature in a rope sling and carefully move it into position and align it to the flywheel.
3. Rotate the armature 1/8 of a turn, in either direction, to engage the locking mechanism and line up the bolt holes. Be certain that the coupling plate is fully and cleanly seated in the flywheel.
4. Replace the eight screws and four blower segments. Tighten the screws.
5. Perform the ***Generator Frame Replacement Procedure***.
6. Perform the ***Alternator Stator Replacement Procedure***.
7. Perform the ***Alternator Rotor Replacement Procedure***.
8. Perform the ***Retest After Repair Procedure***.

Figure F.28 – Sling lift

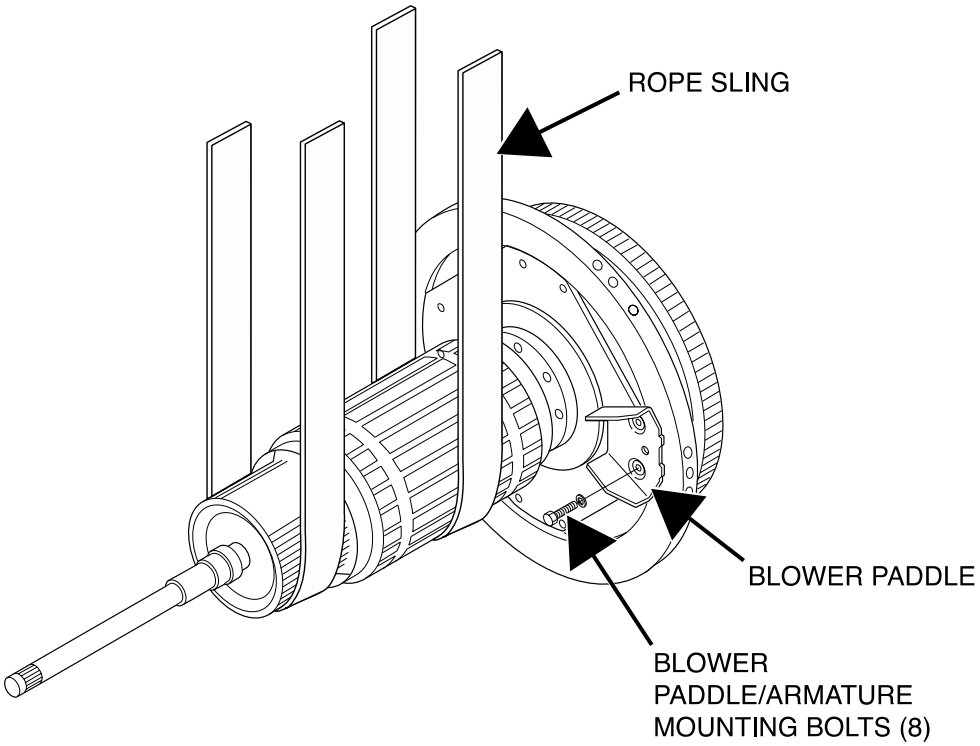

CHOKE REMOVAL AND REPLACEMENT PROCEDURE

Service and repair should be performed by only Lincoln Electric factory trained personnel. Unauthorized repairs performed on this equipment may result in danger to the technician or machine operator and will invalidate your factory warranty. For your safety and to avoid electrical shock, please observe all safety notes and precautions detailed throughout this manual. If for any reason you do not understand the test procedures or are unable to perform the test/repairs safely, contact the Lincoln Electric Service Department for electrical troubleshooting assistance before you proceed. Call 1-888-935-3877.

TEST DESCRIPTION

This procedure will aid the technician in the removal and replacement of the Choke.

MATERIALS NEEDED

1/2” Open-End Wrench
1/2” Socket
9/16” Open-End Wrench
9/16” Socket
Wiring Diagram

REMOVAL PROCEDURE

1. Turn off the engine on the SAE-300 HE machine.
2. Remove the roof and side covers.
3. Remove the lower control panel to gain access to the choke leads.
4. Using a 1/2” open-end wrench and a 1/2”socket, remove the bolt, nut and lock washer securing leads to the top choke terminal. Label and disconnect leads. See ***Figure F.29***. See Wiring Diagram.
5. Using a 1/2” open-end wrench and a 1/2” socket, remove the bolt, nut and lock washer securing leads to the bottom choke terminal. Label and disconnect leads. See ***Figure F.29***. See Wiring Diagram.
6. Using a 9/16” open-end wrench and a 9/16” socket, remove the bolt, nut and lock washer securing the choke to the fuel rail.
7. Using a 9/16” open-end wrench and a 9/16” socket, remove the two bolts, flat washers and lock washers securing the choke to the front panel.
8. The choke can now be removed and replaced.

REPLACEMENT PROCEDURE

1. Carefully position the new choke into the machine.
2. Using a 9/16” open-end wrench and a 9/16” socket, attach the two bolts, flat washers and lock washers securing the choke to the front panel.
3. Using a 9/16” open-end wrench and a 9/16” socket, attach the bolt, nut and lock washer securing the choke to the fuel rail.

4. Using a 1/2” open-end wrench and a 1/2” socket, attach the bolt, nut and lock washer securing leads to the bottom choke terminal. See Wiring Diagram.
5. Using a 1/2” open-end wrench and a 1/2”socket, attach the bolt, nut and lock washer securing leads to the top choke terminal. See Figure F.X. See Wiring Diagram.
6. Attach the roof and side covers to the machine.
7. Perform the ***Retest After Repair Procedure***.

Figure F.29 – Choke terminal locations

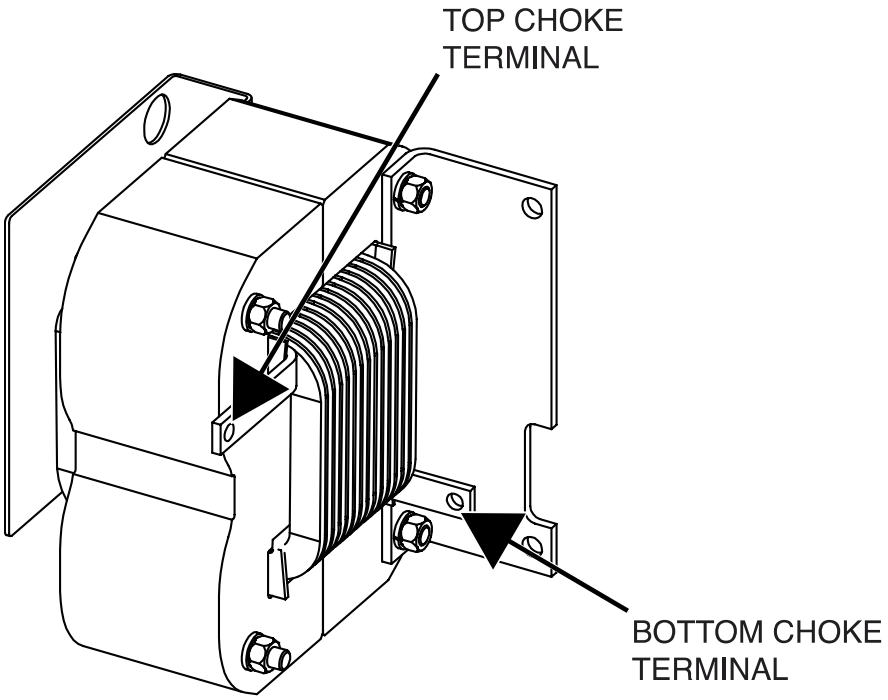

CURRENT SENSE BOARD REMOVAL AND REPLACEMENT PROCEDURE

Service and repair should be performed by only Lincoln Electric factory trained personnel. Unauthorized repairs performed on this equipment may result in danger to the technician or machine operator and will invalidate your factory warranty. For your safety and to avoid electrical shock, please observe all safety notes and precautions detailed throughout this manual. If for any reason you do not understand the test procedures or are unable to perform the test/repairs safely, contact the Lincoln Electric Service Department for electrical troubleshooting assistance before you proceed. Call 1-888-935-3877.

TEST DESCRIPTION

This procedure will aid the technician in the removal and replacement of the Current Sense Board.

MATERIALS NEEDED

Phillips Screwdriver
Wiring Diagram

REMOVAL PROCEDURE

1. Turn off the engine on the SAE-300 HE machine.
2. Open the left side cover.
3. Label and disconnect the plug from the current sense board. See ***Figure F.30***. See Wiring Diagram.
4. Label and disconnect the four quick connect terminals securing leads to the current sense board. See Wiring Diagram.
5. Using a Phillips screwdriver, remove the two screws securing the current sense board to the rear of the front panel.
6. The current sense board can now be removed and replaced.

REPLACEMENT PROCEDURE

1. Carefully position the new current sense board into the machine.
2. Using a Phillips screwdriver, attach the two screws securing the current sense board to the rear of the front panel.
3. Connect the four quick connect terminals securing leads to the current sense board. See Wiring Diagram.
4. Connect the previously disconnected plug to the current sense board. See Wiring Diagram.
5. Close the left side cover.
6. Perform the ***Retest After Repair Procedure***.

Figure F.30 – Current sense board plug location

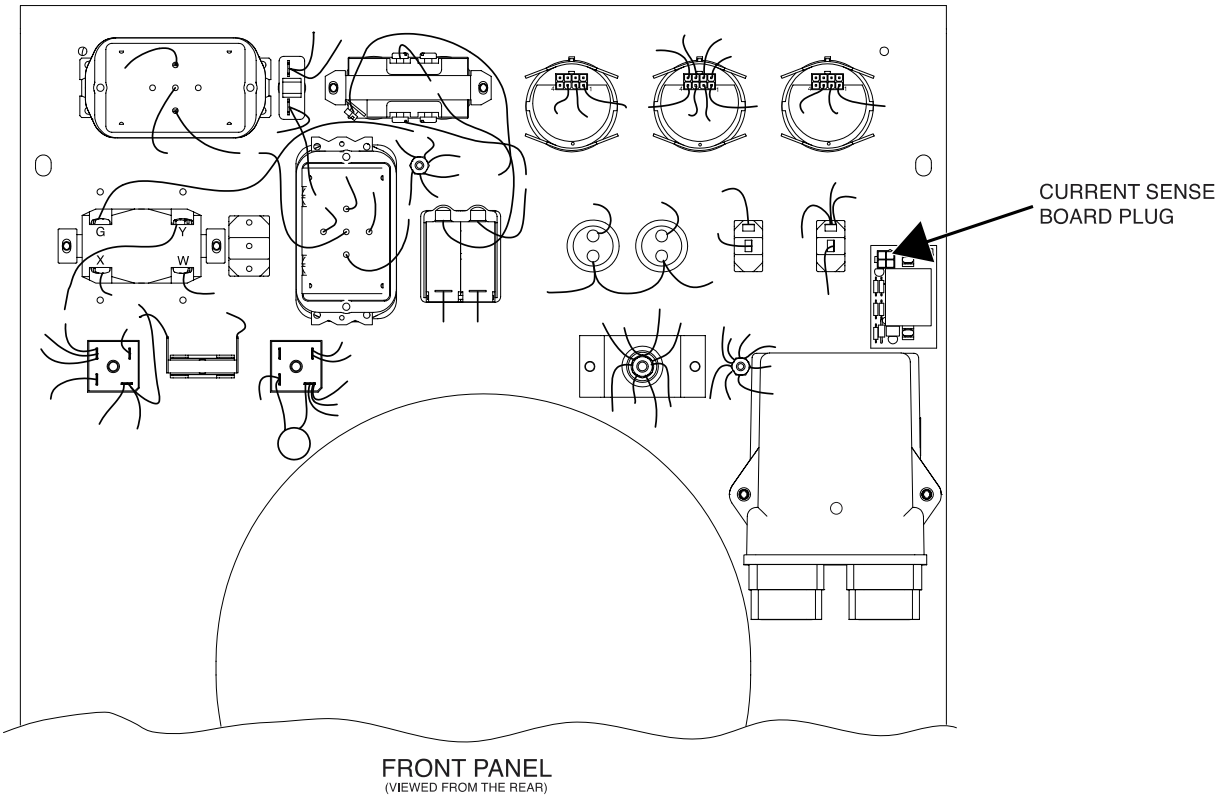

ENGINE GOVERNOR CONTROLLER (EGC) REMOVAL AND REPLACEMENT PROCEDURE

Service and repair should be performed by only Lincoln Electric factory trained personnel. Unauthorized repairs performed on this equipment may result in danger to the technician or machine operator and will invalidate your factory warranty. For your safety and to avoid electrical shock, please observe all safety notes and precautions detailed throughout this manual. If for any reason you do not understand the test procedures or are unable to perform the test/repairs safely, contact the Lincoln Electric Service Department for electrical troubleshooting assistance before you proceed. Call 1-888-935-3877.

TEST DESCRIPTION

This procedure will aid the technician in the removal and replacement of the Engine Governor Controller (EGC).

MATERIALS NEEDED

Slotted Screwdriver
Wiring Diagram

REMOVAL PROCEDURE

1. Turn off the engine on the SAE-300 HE machine.
2. Open the left side cover.
3. Label and disconnect plugs J1 and J2 from the engine governor controller. See ***Figure F.31***. See Wiring Diagram.
4. Using a slotted screwdriver, remove the two screws, standoffs, nuts and two washers securing the electronic governor controller to the rear of the front panel. See ***Figure F.31***.
5. The engine governor controller (EGC) can now be replaced.

REPLACEMENT PROCEDURE

1. Carefully position the new engine governor controller (EGC) into the machine.
2. Using a slotted screwdriver, attach the two screws, standoffs, nuts and two washers securing the electronic governor controller to the rear of the front panel.
3. Connect plugs J1 and J2 to the engine governor controller. See Wiring Diagram.
4. Close the left side cover.
5. Perform the ***Retest After Repair Procedure***.

Figure F.31 – Engine governor controller (EGC) plug and mounting hardware locations

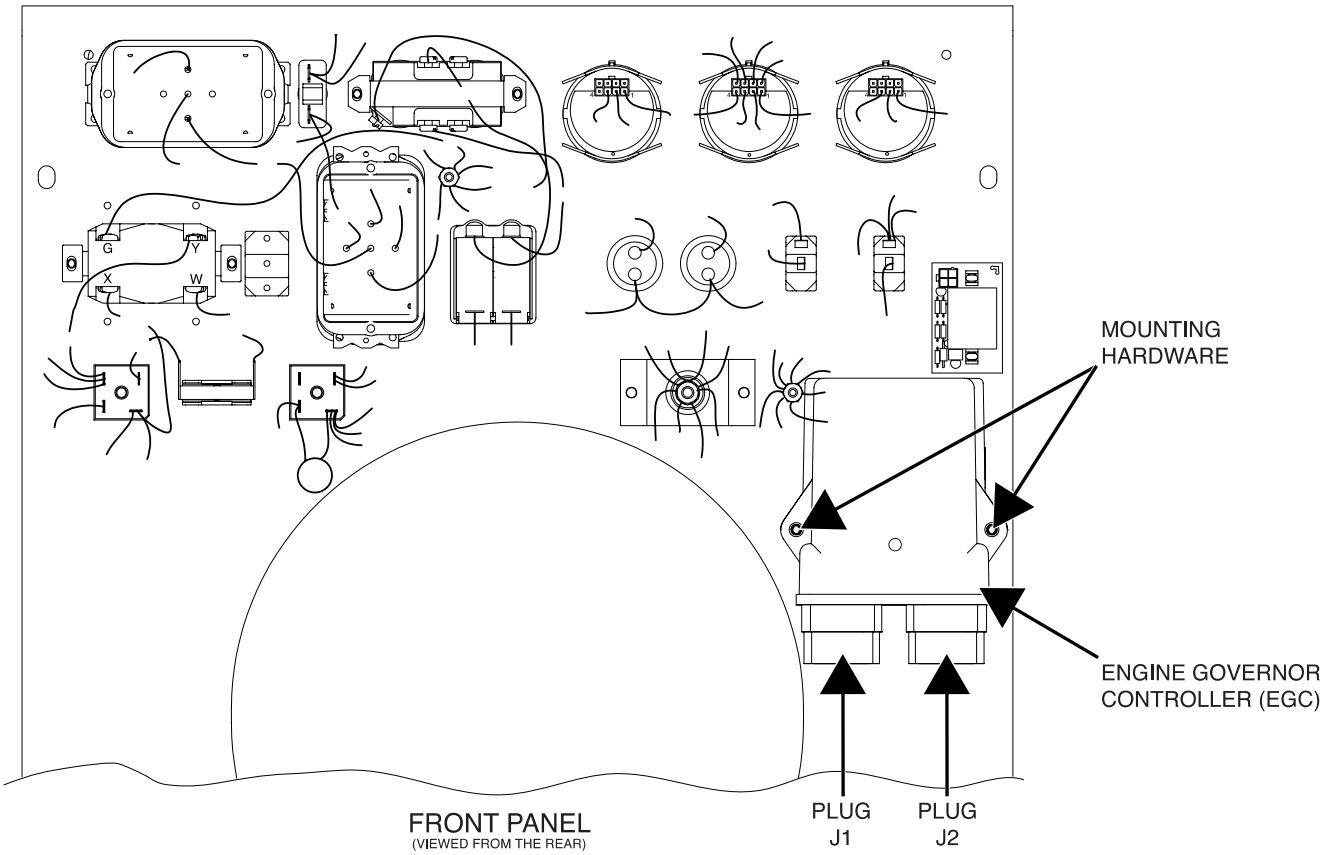

RHEOSTAT REMOVAL AND REPLACEMENT PROCEDURE

Service and repair should be performed by only Lincoln Electric factory trained personnel. Unauthorized repairs performed on this equipment may result in danger to the technician or machine operator and will invalidate your factory warranty. For your safety and to avoid electrical shock, please observe all safety notes and precautions detailed throughout this manual. If for any reason you do not understand the test procedures or are unable to perform the test/repairs safely, contact the Lincoln Electric Service Department for electrical troubleshooting assistance before you proceed. Call 1-888-935-3877.

TEST DESCRIPTION

This procedure will aid the technician in the removal and replacement of the Rheostat.

MATERIALS NEEDED

11/32” Nutdriver
3/32” Allen Wrench
Wiring Diagram

REMOVAL PROCEDURE

1. Turn off the engine on the SAE-300 HE machine.
2. Open the side covers and secure them with the hooks provided.
3. Using an 11/32” nutdriver, remove the two nuts securing the leads to the rheostat terminals. See ***Figure F.32***. See Wiring Diagram.
4. Using a 3/32” Allen wrench, loosen the setscrew securing the knob to the rheostat shaft.
5. The rheostat can now be removed and replaced.

REPLACEMENT PROCEDURE

1. Carefully the new rheostat into the front panel.
2. Using a 3/32” Allen wrench, tighten the setscrew securing the knob to the rheostat shaft.
3. Using an 11/32” nutdriver, attach the two nuts securing the leads to the rheostat terminals. See Wiring Diagram.
4. Close the side covers.
5. Perform the ***Retest After Repair Procedure***.

Figure F.32 – Rheostat terminal locations

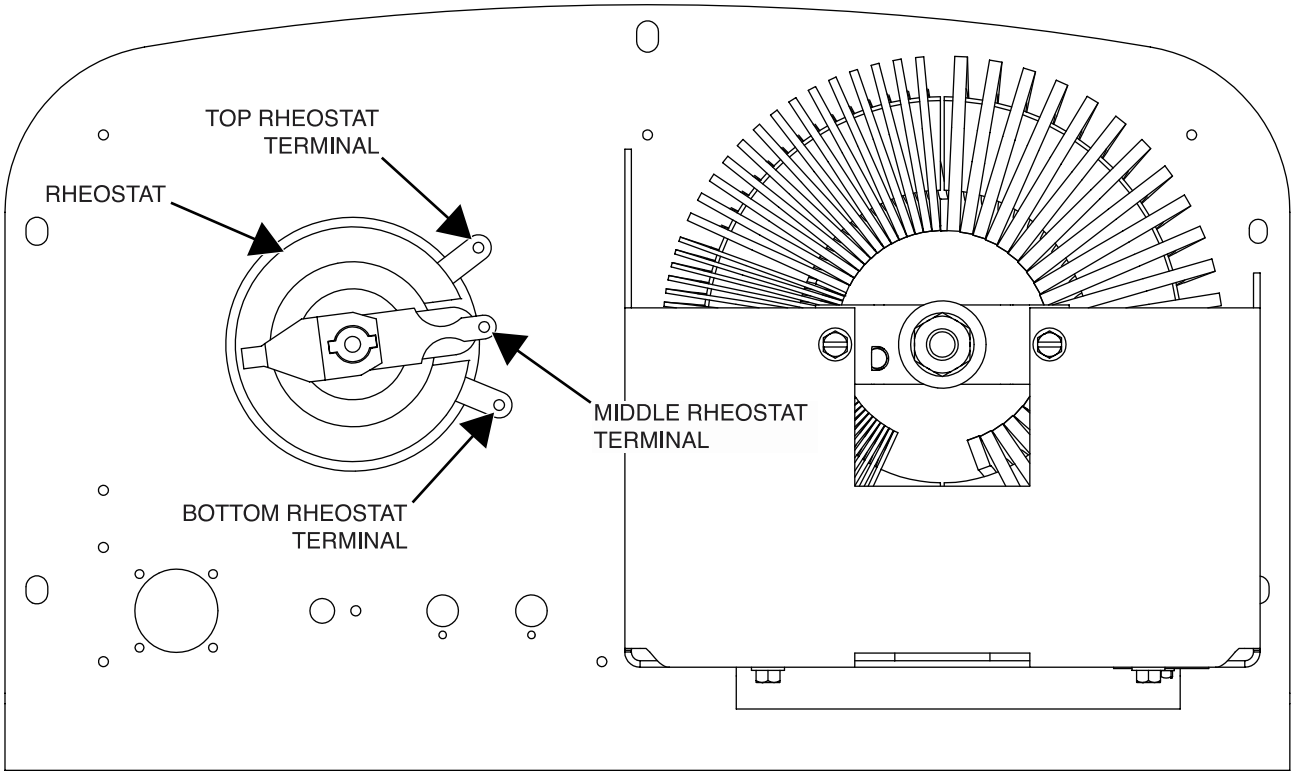

RETEST AFTER REPAIR

Retest a machine:

• If it is rejected under test for any reason that requires you to remove any part which could affect the machine's electrical characteristics.

OR

• If you repair or replace any electrical components.

ENGINE OUTPUT

IDLE RPM		FULL LOAD RPM
HIGH IDLE	1800	1800
LOW IDLE	1440	N/A

RATED OUTPUT @ 104° F (40° C) – WELDER

WELDING PROCESS	WELDING OUTPUT CURRENT/VOLTAGE/DUTY CYCLE	OUTPUT RANGE AMPS	MAX. WELD OCV @ FULL LOAD RPM
DC CONSTANT CURRENT	250A / 30V / 100% 300A / 32V / 60%	30A TO 300A	90 VOLTS

RATED OUTPUT @ 104° F (40° C) - GENERATOR

AUXILIARY POWER SINGLE PHASE 60 HZ AC		
VOLTS	AMPS	POWER
120	26 AMPS	3,000 WATTS
240	13 AMPS	3,000 WATTS