Return to Master TOC
View Safety Info
Return to Master TOC
View Safety Info
Return to Master TOC
View Safety Info
Return to Master TOC
View Safety Info

LINCOLN ELECTRIC

GENUINE LINCOLN PARTS™

CLASSIC® 300D & 300G

NOTE: This manual will cover most of the troubleshooting and repair procedures for the code numbers listed. Some variances may exist when troubleshooting/repairing later code numbers.

For use with machines having Code Numbers; **10912, 10927, 10927, 11110, 11111, 11112, 11113, 11135, 11243, 11244, 11248, 11249, 11280, 11281, 11411, 11412, 11413, 11414, 11472, 11473, 11474, 11475, 11499, 11500, 11545, 11546, 11547, 11548, 11572, 11573, 11640, 11641, 11642, 11643, 11809, 11810, 11811, 11812, 11902, 11915, 12091, 12092**

SERVICE MANUAL

Need Help? Call 1.888.935.3877
to talk to a Service Representative

Hours of Operation:
8:00 AM to 6:00 PM (ET) Mon. thru Fri.

After hours?
Use “Ask the Experts” at lincolnelectric.com
A Lincoln Service Representative will contact you no later than the following business day.

For Service outside the USA:
Email: globalservice@lincolnelectric.com

SVM194-A | Issue Date 09-Oct
© Lincoln Global, Inc. All Rights Reserved.

THE LINCOLN ELECTRIC COMPANY
22801 St. Clair Avenue • Cleveland, OH • 44117-1199 • U.S.A.
Phone: +1.216.481.8100 • www.lincolnelectric.com

Return to Master TOC
Return to Master TOC
Return to Master TOC
Return to Master TOC

⚠ WARNING

⚠ CALIFORNIA PROPOSITION 65 WARNINGS ⚠

Diesel engine exhaust and some of its constituents are known to the State of California to cause cancer, birth defects, and other reproductive harm.

The Above For Diesel Engines

The engine exhaust from this product contains chemicals known to the State of California to cause cancer, birth defects, or other reproductive harm.

The Above For Gasoline Engines

ARC WELDING can be hazardous. PROTECT YOURSELF AND OTHERS FROM POSSIBLE SERIOUS INJURY OR DEATH. KEEP CHILDREN AWAY. PACEMAKER WEARERS SHOULD CONSULT WITH THEIR DOCTOR BEFORE OPERATING.

Read and understand the following safety highlights. For additional safety information, it is strongly recommended that you purchase a copy of "Safety in Welding & Cutting - ANSI Standard Z49.1" from the American Welding Society, P.O. Box 351040, Miami, Florida 33135 or CSA Standard W117.2-1974. A Free copy of "Arc Welding Safety" booklet E205 is available from the Lincoln Electric Company, 22801 St. Clair Avenue, Cleveland, Ohio 44117-1199.

BE SURE THAT ALL INSTALLATION, OPERATION, MAINTENANCE AND REPAIR PROCEDURES ARE PERFORMED ONLY BY QUALIFIED INDIVIDUALS.

FOR ENGINE powered equipment.

1.a. Turn the engine off before troubleshooting and maintenance work unless the maintenance work requires it to be running.

1.b. Operate engines in open, well-ventilated areas or vent the engine exhaust fumes outdoors.

1.c. Do not add the fuel near an open flame welding arc or when the engine is running. Stop the engine and allow it to cool before refueling to prevent spilled fuel from vaporizing on contact with hot engine parts and igniting. Do not spill fuel when filling tank. If fuel is spilled, wipe it up and do not start engine until fumes have been eliminated.

1.d. Keep all equipment safety guards, covers and devices in position and in good repair.Keep hands, hair, clothing and tools away from V-belts, gears, fans and all other moving parts when starting, operating or repairing equipment.

1.e. In some cases it may be necessary to remove safety guards to perform required maintenance. Remove guards only when necessary and replace them when the maintenance requiring their removal is complete. Always use the greatest care when working near moving parts.

1.f. Do not put your hands near the engine fan. Do not attempt to override the governor or idler by pushing on the throttle control rods while the engine is running.

1.g. To prevent accidentally starting gasoline engines while turning the engine or welding generator during maintenance work, disconnect the spark plug wires, distributor cap or magneto wire as appropriate.

1.h. To avoid scalding, do not remove the radiator pressure cap when the engine is hot.

ELECTRIC AND MAGNETIC FIELDS may be dangerous

2.a. Electric current flowing through any conductor causes localized Electric and Magnetic Fields (EMF). Welding current creates EMF fields around welding cables and welding machines

2.b. EMF fields may interfere with some pacemakers, and welders having a pacemaker should consult their physician before welding.

2.c. Exposure to EMF fields in welding may have other health effects which are now not known.

2.d. All welders should use the following procedures in order to minimize exposure to EMF fields from the welding circuit:

2.d.1. Route the electrode and work cables together - Secure them with tape when possible.

2.d.2. Never coil the electrode lead around your body.

2.d.3. Do not place your body between the electrode and work cables. If the electrode cable is on your right side, the work cable should also be on your right side.

2.d.4. Connect the work cable to the workpiece as close as possible to the area being welded.

2.d.5. Do not work next to welding power source.

Mar '95

Return to Master TOC
Return to Master TOC
Return to Master TOC
Return to Master TOC

ELECTRIC SHOCK can kill.

3.a. The electrode and work (or ground) circuits are electrically "hot" when the welder is on. Do not touch these "hot" parts with your bare skin or wet clothing. Wear dry, hole-free gloves to insulate hands.

3.b. Insulate yourself from work and ground using dry insulation. Make certain the insulation is large enough to cover your full area of physical contact with work and ground.

In addition to the normal safety precautions, if welding must be performed under electrically hazardous conditions (in damp locations or while wearing wet clothing; on metal structures such as floors, gratings or scaffolds; when in cramped positions such as sitting, kneeling or lying, if there is a high risk of unavoidable or accidental contact with the workpiece or ground) use the following equipment:

- **Semiautomatic DC Constant Voltage (Wire) Welder.**
- **DC Manual (Stick) Welder.**
- **AC Welder with Reduced Voltage Control.**

3.c. In semiautomatic or automatic wire welding, the electrode, electrode reel, welding head, nozzle or semiautomatic welding gun are also electrically "hot".

3.d. Always be sure the work cable makes a good electrical connection with the metal being welded. The connection should be as close as possible to the area being welded.

3.e. Ground the work or metal to be welded to a good electrical (earth) ground.

3.f. Maintain the electrode holder, work clamp, welding cable and welding machine in good, safe operating condition. Replace damaged insulation.

3.g. Never dip the electrode in water for cooling.

3.h. Never simultaneously touch electrically "hot" parts of electrode holders connected to two welders because voltage between the two can be the total of the open circuit voltage of both welders.

3.i. When working above floor level, use a safety belt to protect yourself from a fall should you get a shock.

3.j. Also see Items 6.c. and 8.

ARC RAYS can burn.

4.a. Use a shield with the proper filter and cover plates to protect your eyes from sparks and the rays of the arc when welding or observing open arc welding. Headshield and filter lens should conform to ANSI Z87. I standards.

4.b. Use suitable clothing made from durable flame-resistant material to protect your skin and that of your helpers from the arc rays.

4.c. Protect other nearby personnel with suitable, non-flammable screening and/or warn them not to watch the arc nor expose themselves to the arc rays or to hot spatter or metal.

FUMES AND GASES can be dangerous.

5.a. Welding may produce fumes and gases hazardous to health. Avoid breathing these fumes and gases.When welding, keep your head out of the fume. Use enough ventilation and/or exhaust at the arc to keep fumes and gases away from the breathing zone. **When welding with electrodes which require special ventilation such as stainless or hard facing (see instructions on container or MSDS) or on lead or cadmium plated steel and other metals or coatings which produce highly toxic fumes, keep exposure as low as possible and within applicable OSHA PEL and ACGIH TLV limits using local exhaust or mechanical ventilation. In confined spaces or in some circumstances, outdoors, a respirator may be required. Additional precautions are also required when welding on galvanized steel.**

5. b. The operation of welding fume control equipment is affected by various factors including proper use and positioning of the equipment, maintenance of the equipment and the specific welding procedure and application involved. Worker exposure level should be checked upon installation and periodically thereafter to be certain it is within applicable OSHA PEL and ACGIH TLV limits.

5.c. Do not weld in locations near chlorinated hydrocarbon vapors coming from degreasing, cleaning or spraying operations. The heat and rays of the arc can react with solvent vapors to form phosgene, a highly toxic gas, and other irritating products.

5.d. Shielding gases used for arc welding can displace air and cause injury or death. Always use enough ventilation, especially in confined areas, to insure breathing air is safe.

5.e. Read and understand the manufacturer's instructions for this equipment and the consumables to be used, including the material safety data sheet (MSDS) and follow your employer's safety practices. MSDS forms are available from your welding distributor or from the manufacturer.

5.f. Also see item 1.b.

Return to Master TOC
Return to Master TOC
Return to Master TOC
Return to Master TOC

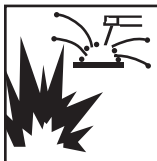

WELDING and CUTTING SPARKS can cause fire or explosion.

6.a. Remove fire hazards from the welding area.If this is not possible, cover them to prevent the welding sparks from starting a fire. Remember that welding sparks and hot materials from welding can easily go through small cracks and openings to adjcent areas. Avoid welding near hydraulic lines. Have a fire extinguisher readily available.

6.b. Where compressed gases are to be used at the job site, special precautions should be used to prevent hazardous situations. Refer to “Safety in Welding and Cutting” (ANSI Standard Z49.1) and the operating information for the equipment being used.

6.c. When not welding, make certain no part of the electrode circuit is touching the work or ground. Accidental contact can cause overheating and create a fire hazard.

6.d. Do not heat, cut or weld tanks, drums or containers until the proper steps have been taken to insure that such procedures will not cause flammable or toxic vapors from substances inside. They can cause an explosion even though they have been “cleaned”. For information, purchase “Recommended Safe Practices for the Preparation for Welding and Cutting of Containers and Piping That Have Held Hazardous Substances”, AWS F4.1 from the American Welding Society (see address above).

6.e. Vent hollow castings or containers before heating, cutting or welding. They may explode.

6.f. Sparks and spatter are thrown from the welding arc. Wear oil free protective garments such as leather gloves, heavy shirt, cuffless trousers, high shoes and a cap over your hair. Wear ear plugs when welding out of position or in confined places. Always wear safety glasses with side shields when in a welding area.

6.g. Connect the work cable to the work as close to the welding area as practical. Work cables connected to the building framework or other locations away from the welding area increase the possibility of the welding current passing through lifting chains, crane cables or other alternate circuits. This can create fire hazards or overheat lifting chains or cables until they fail.

6.h. Also see item 1.c.

6.I. Read and follow NFPA 51B “ Standard for Fire Prevention During Welding, Cutting and Other Hot Work”, available from NFPA, 1 Batterymarch Park,PO box 9101, Quincy, Ma 022690-9101.

6.j. Do not use a welding power source for pipe thawing.

CYLINDER may explode if damaged.

7.a. Use only compressed gas cylinders containing the correct shielding gas for the process used and properly operating regulators designed for the gas and pressure used. All hoses, fittings, etc. should be suitable for the application and maintained in good condition.

7.b. Always keep cylinders in an upright position securely chained to an undercarriage or fixed support.

7.c. Cylinders should be located:

- Away from areas where they may be struck or subjected to physical damage.
- A safe distance from arc welding or cutting operations and any other source of heat, sparks, or flame.

7.d. Never allow the electrode, electrode holder or any other electrically “hot” parts to touch a cylinder.

7.e. Keep your head and face away from the cylinder valve outlet when opening the cylinder valve.

7.f. Valve protection caps should always be in place and hand tight except when the cylinder is in use or connected for use.

7.g. Read and follow the instructions on compressed gas cylinders, associated equipment, and CGA publication P-l, “Precautions for Safe Handling of Compressed Gases in Cylinders,” available from the Compressed Gas Association 1235 Jefferson Davis Highway, Arlington, VA 22202.

FOR ELECTRICALLY powered equipment.

8.a. Turn off input power using the disconnect switch at the fuse box before working on the equipment.

8.b. Install equipment in accordance with the U.S. National Electrical Code, all local codes and the manufacturer’s recommendations.

8.c. Ground the equipment in accordance with the U.S. National Electrical Code and the manufacturer’s recommendations.

Refer to **http://www.lincolnelectric.com/safety** for additional safety information.

Jan ‘09

Return to Master TOC
Return to Master TOC
Return to Master TOC
Return to Master TOC

PRÉCAUTIONS DE SÛRETÉ

Pour votre propre protection lire et observer toutes les instructions et les précautions de sûreté specifiques qui parraissent dans ce manuel aussi bien que les précautions de sûreté générales suivantes:

Sûreté Pour Soudage A L'Arc

1. Protegez-vous contre la secousse électrique:

   a. Les circuits à l'électrode et à la piéce sont sous tension quand la machine à souder est en marche. Eviter toujours tout contact entre les parties sous tension et la peau nue ou les vétements mouillés. Porter des gants secs et sans trous pour isoler les mains.
   b. Faire trés attention de bien s'isoler de la masse quand on soude dans des endroits humides, ou sur un plancher metallique ou des grilles metalliques, principalement dans les positions assis ou couché pour lesquelles une grande partie du corps peut être en contact avec la masse.
   c. Maintenir le porte-électrode, la pince de masse, le câble de soudage et la machine à souder en bon et sûr état defonctionnement.
   d.Ne jamais plonger le porte-électrode dans l'eau pour le refroidir.
   e. Ne jamais toucher simultanément les parties sous tension des porte-électrodes connectés à deux machines à souder parce que la tension entre les deux pinces peut être le total de la tension à vide des deux machines.
   f. Si on utilise la machine à souder comme une source de courant pour soudage semi-automatique, ces precautions pour le porte-électrode s'applicuent aussi au pistolet de soudage.

2. Dans le cas de travail au dessus du niveau du sol, se protéger contre les chutes dans le cas ou on recoit un choc. Ne jamais enrouler le câble-électrode autour de n'importe quelle partie du corps.

3. Un coup d'arc peut être plus sévère qu'un coup de soliel, donc:

   a. Utiliser un bon masque avec un verre filtrant approprié ainsi qu'un verre blanc afin de se protéger les yeux du rayonnement de l'arc et des projections quand on soude ou quand on regarde l'arc.
   b. Porter des vêtements convenables afin de protéger la peau de soudeur et des aides contre le rayonnement de l'arc.
   c. Protéger l'autre personnel travaillant à proximité au soudage à l'aide d'écrans appropriés et non-inflammables.

4. Des gouttes de laitier en fusion sont émises de l'arc de soudage. Se protéger avec des vêtements de protection libres de l'huile, tels que les gants en cuir, chemise épaisse, pantalons sans revers, et chaussures montantes.

5. Toujours porter des lunettes de sécurité dans la zone de soudage. Utiliser des lunettes avec écrans lateraux dans les zones où l'on pique le laitier.

6. Eloigner les matériaux inflammables ou les recouvrir afin de prévenir tout risque d'incendie dû aux étincelles.

7. Quand on ne soude pas, poser la pince à une endroit isolé de la masse. Un court-circuit accidental peut provoquer un échauffement et un risque d'incendie.

8. S'assurer que la masse est connectée le plus prés possible de la zone de travail qu'il est pratique de le faire. Si on place la masse sur la charpente de la construction ou d'autres endroits éloignés de la zone de travail, on augmente le risque de voir passer le courant de soudage par les chaines de levage, câbles de grue, ou autres circuits. Cela peut provoquer des risques d'incendie ou d'echauffement des chaines et des câbles jusqu'à ce qu'ils se rompent.

9. Assurer une ventilation suffisante dans la zone de soudage. Ceci est particuliérement important pour le soudage de tôles galvanisées plombées, ou cadmiées ou tout autre métal qui produit des fumeés toxiques.

10. Ne pas souder en présence de vapeurs de chlore provenant d'opérations de dégraissage, nettoyage ou pistolage. La chaleur ou les rayons de l'arc peuvent réagir avec les vapeurs du solvant pour produire du phosgéne (gas fortement toxique) ou autres produits irritants.

11. Pour obtenir de plus amples renseignements sur la sûreté, voir le code "Code for safety in welding and cutting" CSA Standard W 117.2-1974.

PRÉCAUTIONS DE SÛRETÉ POUR LES MACHINES À SOUDER À TRANSFORMATEUR ET À REDRESSEUR

1. Relier à la terre le chassis du poste conformement au code de l'électricité et aux recommendations du fabricant. Le dispositif de montage ou la piece à souder doit être branché à une bonne mise à la terre.

2. Autant que possible, l'installation et l'entretien du poste seront effectués par un électricien qualifié.

3. Avant de faires des travaux à l'interieur de poste, la debrancher à l'interrupteur à la boite de fusibles.

4. Garder tous les couvercles et dispositifs de sûreté à leur place.

Mar '93

Return to Master TOC
Return to Master TOC
Return to Master TOC
Return to Master TOC

Electromagnetic Compatibility (EMC)

Conformance
Products displaying the CE mark are in conformity with European Community Council Directive of 3 May 1989 on the approximation of the laws of the Member States relating to electromagnetic compatibility (89/336/EEC). It was manufactured in conformity with a national standard that implements a harmonized standard: **EN 60974-10** Electromagnetic Compatibility (EMC) Product Standard for Arc Welding Equipment. It is for use with other Lincoln Electric equipment. It is designed for industrial and professional use.

Introduction
All electrical equipment generates small amounts of electromagnetic emission. Electrical emission may be transmitted through power lines or radiated through space, similar to a radio transmitter. When emissions are received by other equipment, electrical interference may result. Electrical emissions may affect many kinds of electrical equipment; other nearby welding equipment, radio and TV reception, numerical controlled machines, telephone systems, computers, etc. Be aware that interference may result and extra precautions may be required when a welding power source is used in a domestic establishment.

Installation and Use
The user is responsible for installing and using the welding equipment according to the manufacturer's instructions. If electromagnetic disturbances are detected then it shall be the responsibility of the user of the welding equipment to resolve the situation with the technical assistance of the manufacturer. In some cases this remedial action may be as simple as earthing (grounding) the welding circuit, see Note. In other cases it could involve construction of an electromagnetic screen enclosing the power source and the work complete with associated input filters. In all cases electromagnetic disturbances must be reduced to the point where they are no longer troublesome.

Note: The welding circuit may or may not be earthed for safety reasons according to national codes. Changing the earthing arrangements should only be authorized by a person who is competent to access whether the changes will increase the risk of injury, e.g., by allowing parallel welding current return paths which may damage the earth circuits of other equipment.

Assessment of Area
Before installing welding equipment the user shall make an assessment of potential electromagnetic problems in the surrounding area. The following shall be taken into account:

a) other supply cables, control cables, signaling and telephone cables; above, below and adjacent to the welding equipment;

b) radio and television transmitters and receivers;

c) computer and other control equipment;

d) safety critical equipment, e.g., guarding of industrial equipment;

e) the health of the people around, e.g., the use of pacemakers and hearing aids;

f) equipment used for calibration or measurement

g) the immunity of other equipment in the environment. The user shall ensure that other equipment being used in the environment is compatible. This may require additional protection measures;

h) the time of day that welding or other activities are to be carried out.

L10093 3-1-96H

Return to Master TOC
Return to Master TOC
Return to Master TOC
Return to Master TOC

Electromagnetic Compatibility (EMC)

The size of the surrounding area to be considered will depend on the structure of the building and other activities that are taking place. The surrounding area may extend beyond the boundaries of the premises.

Methods of Reducing Emissions

Mains Supply
Welding equipment should be connected to the mains supply according to the manufacturer's recommendations. If interference occurs, it may be necessary to take additional precautions such as filtering of the mains supply. Consideration should be given to shielding the supply cable of permanently installed welding equipment, in metallic conduit or equivalent. Shielding should be electrically continuous throughout its length. The shielding should be connected to the welding power source so that good electrical contact is maintained between the conduit and the welding power source enclosure.

Maintenance of the Welding Equipment
The welding equipment should be routinely maintained according to the manufacturer's recommendations. All access and service doors and covers should be closed and properly fastened when the welding equipment is in operation. The welding equipment should not be modified in any way except for those changes and adjustments covered in the manufacturers instructions. In particular, the spark gaps of arc striking and stabilizing devices should be adjusted and maintained according to the manufacturer's recommendations.

Welding Cables
The welding cables should be kept as short as possible and should be positioned close together, running at or close to floor level.

Equipotential Bonding
Bonding of all metallic components in the welding installation and adjacent to it should be considered. However, metallic components bonded to the work piece will increase the risk that the operator could receive a shock by touching these metallic components and the electrode at the same time. The operator should be insulated from all such bonded metallic components.

Earthing of the Workpiece
Where the workpiece is not bonded to earth for electrical safety, not connected to earth because of its size and position, e.g., ships hull or building steelwork, a connection bonding the workpiece to earth may reduce emissions in some, but not all instances. Care should be taken to prevent the earthing of the workpiece increasing the risk of injury to users, or damage to other electrical equipment. Where necessary, the connection of the workpiece to earth should be made by a direct connection to the workpiece, but in some countries where direct connection is not permitted, the bonding should be achieved by suitable capacitance, selected according to national regulations.

Screening and Shielding
Selective screening and shielding of other cables and equipment in the surrounding area may alleviate problems of interference. Screening of the entire welding installation may be considered for special applications. 1

---

1 Portions of the preceding text are contained in EN 60974-10: "Electromagnetic Compatibility (EMC) product standard for arc welding equipment."

L10093 3-1-96H

- MASTER TABLE OF CONTENTS FOR ALL SECTIONS -

Page

Safety ..... i-iv

Installation ..... Section A's
- Classic® 300D Perkins 104-22 ..... A.1
- Classic® 300D Perkins 404C-22 ..... A.2
- Classic® 300D Kubota V2203M A.3
- Classic® 300D Perkins 404D-22 ..... A.4
- Classic® 300G GM 3.0 Liter A.5

Operation ..... Section B's
- Classic® 300D Perkins 104-22 ..... B.1
- Classic® 300D Perkins 404C-22 ..... B.2
- Classic® 300D Kubota V2203M B.3
- Classic® 300D Perkins 404D-22 ..... B.4
- Classic® 300G GM 3.0 Liter B.5

Accessories ..... Section C's
- Classic® 300D Perkins 104-22 ..... C.1
- Classic® 300D Perkins 404C-22 ..... C.2
- Classic® 300D Kubota V2203M C.3
- Classic® 300D Perkins 404D-22 ..... C.4
- Classic® 300G GM 3.0 Liter C.5

Maintenance ..... Section D's
- Classic® 300D Perkins 104-22 ..... D.1
- Classic® 300D Perkins 404C-22 ..... D.2
- Classic® 300D Kubota V2203M D.3
- Classic® 300D Perkins 404D-22 ..... D.4
- Classic® 300G GM 3.0 Liter D.5

Theory of Operation ..... Section E

Troubleshooting and Repair ..... Section F

Electrical Diagrams ..... Section G

Parts Lists P-337, P-379, P-498, P-507
- Classic® 300D Perkins 104-22 ..... P-337
- Classic® 300D Perkins 404C-22 ..... P-507
- Classic® 300D Kubota V2203M P-498
- Classic® 300D Perkins 404D-22 ..... P-507
- Classic® 300G GM 3.0 Liter P-379

TABLE OF CONTENTS - INSTALLATION SECTION

Installation A1

Technical Specifications A1.2

General Description A1.3

Pre-Operation Installation A1.4

Vehicle Mounting A1.5

Polarity Control & Cable Sizes A1.5

Engine Break-In A1.6

Battery Charging A1.6

Return to Master TOC
Return to Master TOC
Return to Master TOC

Return to Section TOC
Return to Master TOC

TECHNICAL SPECIFICATIONS - CLASSIC® 300D

INPUT - DIESEL ENGINE

Make/Model	Description	Speed (RPM)	Displacement	Starting System	Capacities
Perkins 104-22 Diesel Engine (Water Cooled)	4 cylinder 4 Cycle 32.7 HP @ 1800 RPM	High Idle 1800 Low Idle 1350 Full Load 1725	135.6 cu. in (2.2 L) **Bore x Stroke** 3.875" x 5.00" (98.4 mm x 127.0mm)	12VDC batteries (2) & Starter	Fuel: 15 gal. 57 L Oil: 8.7 Qts. 8.2 L Coolant: 7.9 gal. 7.5 L

RATED OUTPUT - WELDER

WELDING OUTPUT* Current/Voltage/Duty Cycle	OPEN CIRCUIT VOLTAGE	OUTPUT RANGE AMPS	AUXILIARY POWER(1)
250A / 30V / 100% 300A / 32V / 60%	98 Max. @ 1800 RPM	40-350A 220A-MAX. 160-240A 120-240A 120-190A 80-130A Min.-90A	115/230 VAC 3000 Watts, 60 Hz. 26 Amps @ 115V 13 Amps @ 230V

PHYSICAL DIMENSIONS(2)

HEIGHT	WIDTH	DEPTH	WEIGHT	
45.50 in. 1156 mm	24.00 in. 610 mm	65.00 in. 1651 mm	K1643-1	1354 lbs. (616 kg)
			K1643-2	1354 lbs. (616 kg)

* Based on a 10 min. period.
(1) 115V will operate either 60 Hz. or 50/60 Hz. power tools, lights etc.
(2) Height to top of exhaust elbow.

PERKINS 104-22 DIESEL ENGINE TYPICAL FUEL CONSUMPTION DATA

Low Idle (1375 RPM)-No Load @ 45 Volts	0.28 gal/hr (1.06 ltrs/hr)
High Idle (1800 RPM)-No Load @ 96.6 Volts	0.45 gal/hr (1.70 ltrs/hr)
50 Amps @ 22 Volts	0.51 gal/hr (1.93 ltrs/hr)
100 Amps @ 24 Volts	0.58 gal/hr (2.19 ltrs/hr)
150 Amps @ 26 Volts	0.70 gal/hr (2.65 ltrs/hr)
200 Amps @ 28 Volts	0.85 gal/hr (3.21 ltrs/hr)
250 Amps @ 30 Volts	1.05 gal/hr (3.97 ltrs/hr)
300 Amps @ 32 Volts	1.31 gal/hr (4.95 ltrs/hr)
350 Amps @ 34 Volts	1.68 gal/hr (6.35 ltrs/hr)

Return to Section TOC
Return to Master TOC
Return to Section TOC
Return to Master TOC
Return to Section TOC
Return to Master TOC
Return to Section TOC
Return to Master TOC

GENERAL DESCRIPTION

The Classic® 300 D is a heavy duty, engine driven, DC arc welding power source, capable of providing constant current output for stick welding or DC TIG welding. This welder is wound with all copper coils, rated at 300 amps/32 Volts, and provides other Classic® features such as improved door latches and stainless hinges. With the addition of the optional K623-1 Wire Feed Module™, the Classic® 300 D will provide constant voltage output for running the LN-7, LN-23P, or LN-25 wire feeders. (The Wire Feed Module is factory installed on the K1643-2). The optional K924-4 or K924-5 Remote Control Kit (Both field installed) ***See Section C*** for description.

The Classic® 300 D has Diesel Engine Protection. In the event of sudden low oil pressure or high coolant temperature, the engine immediately shuts down. The Classic® 300 D has a current range of 40-350 DC amps with output ratings as follows:

RATED OUTPUT	DUTY CYCLE
250A @ 30V	100%
300A @ 32V	60%

These units are also capable of providing 3 kVA of 115/230 volts of 60 cycle AC auxiliary power.

The Classic® 300 D uses the Perkins 104-22 industrial water-cooled diesel engine.

DESIGN FEATURES

Control Panel

Both the engine and the welder controls are located on one recessed panel at the exciter end of the machine. The welder controls consist of a five step “Current Range Selector” switch and a “Fine Current Adjustment” rheostat. The welder is equipped with a “Start” button, an “Ignition” switch, an “Idler” control switch, and a “Glow Plug” button for easier cold weather starting.

The control panel also contains an engine temperature gauge, a battery charging ammeter, an oil pressure gauge, two three prong grounding type receptacles and four circuit breakers for auxiliary power.

All Copper Windings - For long life and dependable operation.

Engine Idler - The Classic® 300 D is equipped with an electronic automatic engine idler. It automatically increases and decreases engine speed **when starting and stopping welding or using auxiliary power**. A built-in time delay permits changing electrodes before the engine slows to its low idle speed. The “Idler” control switch on the panel locks the idler in high idle position when desired.

Auxiliary Power - 3.0 kVA of nominal 115/230V, 60Hz, AC. Output voltage is maintained within ± 10% at all loads up to rated capacity. (See ***Optional Features in Section C*** for Power Plug Kit.)

Welder Enclosure - The complete welder is rubber mounted on a rugged steel “C” channel base.

The output terminals are placed at the side of the machines so that they are protected by the door. The output terminals are labeled (+) and (-).

Cranking System - A 12 volt electric starter is standard.

Air Cleaner - Heavy duty two stage dry type.

Muffler - A muffler and stainless steel exhaust outlet elbow are standard.

Engine Hour Meter - A meter to record hours of operation.

Engine Protection - The system shuts the engine down in the event of sudden low oil pressure or high coolant temperature. A warning light on the control panel will indicate such a fault. To reset the engine for restarting, turn the ignition switch off then on.

Return to Section TOC
Return to Master TOC

PRE-OPERATION INSTALLATION

⚠ WARNING

Do not attempt to use this equipment until you have thoroughly read the engine manufacturer's manual supplied with your welder. It includes important safety precautions, detailed engine starting, operating and maintenance instructions, and parts lists.

ELECTRIC SHOCK can kill.
- **Do not touch electrically live parts or electrode with skin or wet clothing.**
- **Insulate yourself from work and ground**
- **Always wear dry insulating gloves.**

ENGINE EXHAUST can kill.
- **Use in open, well ventilated areas or vent exhaust outside.**

MOVING PARTS can injure.
- **Do not operate with doors open or guards off.**
- **Stop engine before servicing.**
- **Keep away from moving parts.**

See additional warning information at the front of this operator's manual.

Exhaust Spark Arrester

Some federal, state or local laws may require that engines be equipped with exhaust spark arresters when they are operated in certain locations where unarrested sparks may present a fire hazard. The standard muffler included with this welder does not qualify as a spark arrester. When required by local regulations, a suitable spark arrester must be installed and properly maintained.

⚠ CAUTION

Use of an incorrect arrester may lead to engine damage or performance loss. Contact the engine manufacturer for specific recommendations.

Location / Ventilation

Always operate the welder with the doors closed. Leaving the doors open changes the designed air flow and may cause overheating.

The welder should be located to provide an unrestricted flow of clean, cool air. Also, locate the welder so that engine exhaust fumes are properly vented to an outside area.

⚠ CAUTION

DO NOT MOUNT OVER COMBUSTIBLE SURFACES.

Where there is a combustible surface directly under stationary or fixed electrical equipment, the surface shall be covered with a steel plate at least .06"(1.6mm) thick, which shall extend not more than 5.90"(150mm) beyond the equipment on all sides.

Machine Grounding

According to the United States National Electrical Code, the frame of this portable generator is not required to be grounded and is permitted to serve as the grounding means for cord connected equipment plugged into its receptacle.

Some state, local, or other codes or unusual operating circumstances may require the machine frame to be grounded. It is recommended that you determine the extent to which such requirements may apply to your particular situation and follow them explicitly. A machine grounding stud marked with the symbol ⏚ is provided on the welding generator frame foot. In general, if the machine is to be grounded, it should be connected with a #8 or larger copper wire to a solid earth ground such as a metal water pipe going into the ground for at least ten feet and having no insulated joints, or to the metal framework of a building which has been effectively grounded. The U.S. National Code lists a number of alternate means of grounding electrical equipment.

Lift Bail

A lift bail is provided for lifting with a hoist.

⚠ WARNING

FALLING EQUIPMENT can cause injury.

- **Lift only with equipment of adequate lifting capacity.**
- **Be sure machine is stable when lifting.**
- **Do not lift this machine using lift bale if it is equipped with a heavy accessory such as trailer or gas cylinder.**
- **Do not lift machine if lift bale is damaged.**
- **Do not operate machine while suspended from lift bale.**

Return to Section TOC
Return to Master TOC

TRAILER (See *Optional Features*)

If the user adapts a non-Lincoln trailer, he must assume responsibility that the method of attachment and usage does not result in a safety hazard nor damage the welding equipment. Some of the factors to be considered are as follows:

1. Design capacity of trailer vs. weight of Lincoln equipment and likely additional attachments.

2. Proper support of, and attachment to, the base of the welding equipment so there will be no undue stress to the framework.

3. Proper placement of the equipment on the trailer to ensure stability side to side and front to back when being moved and when standing by itself while being operated or serviced.

4. Typical conditions of use, i.e., travel speed, roughness of surface on which the trailer will be operated; environmental conditions, likely maintenance.

5. Conformance with federal, state and local laws. (1)

(1) Consult your federal, state and local laws regarding specific requirements for use on public highways.

VEHICLE MOUNTING

Improperly mounted concentrated loads may cause unstable vehicle handling and tires or other components to fail.

- **Only transport this equipment on serviceable vehicles which are rated and designed for such loads.**
- **Distribute, balance and secure loads so vehicle is stable under conditions of use.**
- **Do not exceed maximum rated loads for components such as suspension, axles and tires.**
- **Mount equipment base to metal bed or frame of vehicle.**
- **Follow vehicle manufacturer's instruction.**

POLARITY CONTROL AND CABLE SIZES

With the engine off, route the electrode and work cables through the strain relief bracket on the base and connect to the studs located below the fuel tank mounting rail. (See size recommendations below.) For **positive** polarity, connect the electrode cable to the terminal marked **"+"**. For **Negative** polarity, connect the electrode cable to the **"-"** stud. These connections should be checked periodically and tightened if necessary.

When welding at a considerable distance from the welder, be sure you use ample sized welding cables.

RECOMMENDED COPPER CABLE SIZES			
		Cables Sizes for Combined Length of Electrode Plus Work Cable	
Amps	Duty Cycle	Up to 200ft.(61m)	200 to 250ft. (61 to 76m)
250	100%	1	1/0
300	60%	1/0	2/0

PRE-OPERATION SERVICE

⚠ CAUTION

READ the engine operating and maintenance instructions supplied with this machine.

⚠ WARNING

- **Stop engine while fueling.**
- **Do not smoke when fueling.**
- **Keep sparks and flame away from tank.**
- **Do not leave unattended while fueling.**

DIESEL FUEL can cause fire.

- **Wipe up spilled fuel and allow fumes to clear before starting engine.**
- **Do not overfill tank, fuel expansion may cause overflow.**

DIESEL FUEL ONLY

Oil

This unit is supplied from the factory with the engine crankcase filled with a high quality SAE 10W/30 oil. This oil should be acceptable for most typical ambient temperatures. Consult the engine operation manual for specific engine manufacturer's recommendations. Upon receipt of the welder, check the engine dipstick to be sure the oil is at the "full" mark. DO NOT overfill.

Fuel

Fill the fuel tank with the grade of fuel recommended in the Engine Operator's manual. Make sure the fuel valves on the sediment bowl and the water separator are in the open positions.

Cooling System

The radiator has been filled at the factory with a 50-50 mixture of ethylene glycol antifreeze and water. Check the radiator level and add a 50-50 solution as needed (see engine manual or antifreeze container for alternate antifreeze recommendations).

Return to Section TOC
Return to Master TOC

ENGINE BREAK-IN

Lincoln Electric selects high quality, heavy-duty industrial engines for the portable welding machines we offer. While it is normal to see a small amount of crankcase oil consumption during initial operation, excessive oil use, wetstacking (oil or tar like substance at the exhaust port), or excessive smoke is not normal.

Larger machines with a capacity of 350 amperes and higher, which are operated at low or no-load conditions for extended periods of time are especially susceptible to the conditions described above. To accomplish successful engine break-in, most diesel-powered equipment needs only to be run at a reasonably heavy load within the rating of the welder for some period of time during the engine's early life. However, if the welder is subjected to extensive light loading, occasional moderate to heavy loading of the engine may sometimes be necessary. Caution must be observed in correctly loading a diesel/generator unit.

1. Connect the welder output studs to a suitable resistive load bank. Note that any attempt to short the output studs by connecting the welding leads together, direct shorting of the output studs, or connecting the output leads to a length of steel will result in catastrophic damage to the generator and voids the warranty.

2. Set the welder controls for an output current and voltage within the welder rating and duty cycle. Note that any attempt to exceed the welder rating or duty cycle for any period of time will result in catastrophic damage to the generator and voids the warranty.

3. Periodically shut off the engine and check the crankcase oil level.

Battery Charging

⚠ WARNING

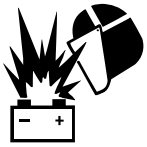

GASES FROM BATTERY can explode.
• Keep sparks, flame and cigarettes away.

BATTERY ACID can burn eyes and skin.
• Wear gloves and eye protection and be careful when boosting, charging or working near battery.

To prevent EXPLOSION when:

a) Installing a new battery - disconnect the negative cable from the old battery first and connect the negative cable to the new battery last.
b) Connecting a battery charger - remove the battery from the welder by disconnecting the negative cable first, then the positive cable and battery clamp. When reinstalling, connect the negative cable last.
c) Using a booster - connect the positive lead to the battery first, then connect the negative lead to the ground lead on the base.

To prevent ELECTRICAL DAMAGE when:

a) Installing a new battery.
b) Using a booster.

Use correct polarity - **Negative Ground**.

To prevent BATTERY DISCHARGE, if you have an ignition switch, turn it off when engine is not running.

• To prevent BATTERY BUCKLING, tighten nuts on battery clamp until snug.

The Classic® 300 D is equipped with a wet charged battery. The charging current is automatically regulated when the battery is low (after starting the engine) to a trickle current when the battery is fully charged.

When replacing, jumping or otherwise connecting the battery to the battery cables, the proper polarity must be observed. This system is **NEGATIVE GROUND**.

TABLE OF CONTENTS - OPERATION SECTION

Operation B1

Engine Operation B1.2

Cold Weather Starting B1.2

Welder Operation B1.3

Auxiliary Power B1.4

Return to Master TOC

Return to Master TOC

Return to Master TOC

Return to Section TOC
Return to Master TOC

ENGINE OPERATION

⚠ WARNING

Do not attempt to use this equipment until you have thoroughly read the engine manufacturer's manual supplied with your welder. It includes important safety precautions, detailed engine starting, operating and maintenance instructions, and parts lists.

ELECTRIC SHOCK can kill.
• Do not touch electrically live parts or electrode with skin or wet clothing.
• Insulate yourself from work and ground
• Always wear dry insulating gloves.

ENGINE EXHAUST can kill.
• Use in open, well ventilated areas or vent exhaust outside.

MOVING PARTS can injure.
• Do not operate with doors open or guards off.
• Stop engine before servicing.
• Keep away from moving parts.

See additional warning information at the front of this operator's manual.

Operate the welder with the doors closed. Leaving the doors open changes the designed air flow and can cause overheating.

Starting the Classic® 300D Perkins 104-22 Diesel Engine

1. Turn the "IDLER" switch to "HIGH".
2. Turn the "IGNITION" switch to "ON".
3. Press the Glow Plug button for 20 to 30 seconds. (maximum 60 seconds).
4. Press the Start button. When the engine starts running, release both buttons. If the engine fails to start in 20 seconds, wait 30 seconds and repeat the above procedure.
5. Observe the oil pressure. If no pressure shows within 30 seconds, stop the engine and consult the engine operating manual. To stop the engine, turn the "IGNITION" switch to "OFF".
6. If the engine protection warning light comes on during cranking or after start up, the "IGNITION" switch must be turned "OFF" to reset the engine protection system.
7. Allow the engine to run at high idle speed for several minutes to warm the engine. Stop the engine and recheck the oil level, after allowing sufficient time for the oil to drain into the pan. If the level is down, fill it to the full mark again. The engine controls were properly set at the factory and should require no adjusting when received.

COLD WEATHER STARTING:

With a fully charged battery and the proper weight oil, the engine should start satisfactorily even down to about -15°F (-26°C), it maybe desirable to install cold-starting aides.

Note: Extreme cold weather staring may require longer glow plug operation.

⚠ WARNING

Under NO conditions should ether or other starting fluids be used!

Stopping the Engine

1. Turn the "IGNITION" switch to "OFF"

At the end of each day's welding, check the crankcase oil level, drain accumulated dirt and water from the sediment bowl under the fuel tank and refill the fuel tank to minimize moisture condensation in the tank. Also, running out of fuel tends to draw dirt into the fuel system.

When hauling the welder between job sites, close the fuel feed valve beneath the fuel tank.

If the fuel supply is cut off or runs out while the fuel pump is operating, air may be entrapped in the fuel distribution system. If this happens, bleeding of the fuel system may be necessary. Use qualified personnel to do this per the instructions in the ***MAINTENANCE*** section of this manual.

WELDER OPERATION

⚠ WARNING

ELECTRIC SHOCK can kill.
- **Do not touch electrically live parts or electrode with skin or wet clothing.**
- **Insulate yourself from work and ground.**

FUMES & GASES can be dangerous.
- **Keep your head out of the fumes.**
- **Use ventilation or exhaust to remove fumes from breathing zone.**

WELDING SPARKS can cause fire or explosion.
- **Keep flammable material away.**

ARC RAYS can burn.
- **Wear eye, ear, and body protection.**

Duty Cycle

The NEMA output rating of the Classic® 300 D is 300 amperes at 32 arc volts on a 60% duty cycle (consult Specifications in this manual for alternate ratings). Duty cycle is based on a ten minute period; thus, the welder can be loaded at rated output for six minutes out of every ten minute period.

Control of Welding Current

⚠ CAUTION

DO NOT TURN THE "CURRENT RANGE SELECTOR" WHILE WELDING because the current may arc between the contacts and damage the switch.

The "Current Range Selector" provides five overlapping current ranges. The "Fine Current Adjustment" adjusts the current from minimum to maximum within each range. Open circuit voltage is also controlled by the "Fine Current Adjustment" permitting control of the arc characteristics.

A high open circuit voltage setting provides the soft "buttering" arc with best resistance to pop-outs preferred for most welding. To get this characteristic, set the "Current Range Selector" to the lowest setting that still provides the current you need and set the "Fine Current Adjustment" near maximum. For example: to obtain 175 amps and a soft arc, set the "Current Range Selector" to the 190-120 position and then adjust the "Fine Current Adjustment" for 175 amps.

When a forceful "digging" arc is required, usually for vertical and overhead welding, use a higher "Current Range Selector" setting and lower open circuit voltage. For example: to obtain 175 amps and a forceful arc, set the "Current Range Selector" to the 240-160 position and the "Fine Current Adjustment" setting to get 175 amps.

Some arc instability may be experienced with EXX10 electrodes when trying to operate with long arc techniques at settings at the lower end of the open circuit voltage range.

⚠ CAUTION

DO NOT attempt to set the "Current Range Selector" between the five points designated on the nameplate.

These switches have a spring loaded cam which almost eliminates the possibility of setting this switch between the designated points.

Idler Operation

Start the engine with the "Idler" switch in the "High" position. Allow it to run at high idle speed for several minutes to warm the engine. ***See Specifications*** for operating speeds.

The idler is controlled by the "Idler" toggle switch on the welder control panel. The switch has two positions as follows:

1. In the "High" position, the idler solenoid activates, and the engine goes to high idle speed. The speed is controlled by the governor.

2. In the "Auto" / position, the idler operates as follows:

a. When welding or drawing power for lights or tools (approximately 100-150 watts minimum) from the receptacles, the idler solenoid activates and the engine operates at high idle speed.

b. When welding ceases or the power load is turned off, a preset time delay of about 15 seconds starts. This time delay cannot be adjusted.

c. If the welding or power load is not re-started before the end of the time delay, the idler solenoid deactivates and reduces the engine to low idle speed.

Return to Section TOC
Return to Master TOC

AUXILIARY POWER

The AC auxiliary power, supplied as a standard, has a rating of 3.0 kVA of 115/230 VAC (60 hertz).

With the 3.0 kVA, 115/230 VAC auxiliary power, one 115V duplex and one 230V duplex, grounding type receptacle are provided. The circuit is protected with circuit breakers.

The rating of 3.0 kVA permits a maximum continuous current of 13 amps to be drawn from the 230 volt duplex receptacle. Or a total of 26 amps can be drawn from the 115 volt duplex receptacle. The 115 volt duplex receptacle has a configuration which permits 20 amps to be drawn from either half. The total combined load of all receptacles is not to exceed 3.0 kVA.

An optional power plug kit is available. When this kit is specified, the customer is supplied with a plug for each receptacle.

Return to Section TOC
Return to Master TOC
Return to Section TOC
Return to Master TOC
Return to Section TOC
Return to Master TOC

TABLE OF CONTENTS - ACCESSORIES SECTION

Accessories C1

Options C1.2

Wire Feed Options C1.3

Return to Master TOC
Return to Master TOC
Return to Master TOC
Return to Master TOC

Return to Section TOC
Return to Master TOC

OPTIONAL FEATURES (Field Installed)

GENERAL OPTIONS

⚠ WARNING

Pipe Thawing with an arc welder can cause fire, explosion, damage to electric wiring or to the arc welder if done improperly. The use of an arc welder for pipe thawing is not approved by the CSA, nor is it recommended or supported by Lincoln Electric.

Power Plug Kit (K802D) - A power plug kit for the auxiliary power receptacles is available. (Provides a plug for each receptacle.)

GFCI Receptacle Kit (K1690-1) - Includes one UL approved 115V ground fault circuit interrupter duplex type receptacle with cover and installation instructions. Replaces the factory installed 115V duplex receptacle. Each receptacle of the GFCI duplex is rated at 20 amps. Maximum total current from the GFCI duplex is limited to 20 amps. See the ***MAINTENANCE*** section for detailed information on testing and resetting the GFCI receptacle.

Spark Arrestor Kit (K903-1) - Includes a heavy gage steel, approved spark arrestor, clamp and adapter for mounting to the muffler exhaust pipe.

K953-1 TRAILER - Two-wheeled trailer with optional fender and light package. For highway use, consult applicable federal, state, and local laws regarding possible additional requirements. There is a choice of 2 hitches, a fender & a light package.
K953-1 Trailer
K958-1 Ball Hitch
K958-2 Lunette Eye Hitch
K959-1 Fender & Light Kit
K965-1 Cable Rack

OIL DRAIN KIT K1586-1 - Includes ball valve, hose and clamp.

STICK OPTIONS

K704 ACCESSORY SET - Includes 35 feet (10 m) of electrode cable and 30 feet (9 m) of work cable, headshield, work clamp and electrode holder. Cable is rated at 500 amps, 60% duty cycle.

Remote Control Kit (K924-4) - Contains switch, receptacle, remote control rheostat, and 100 ft (30.5m) cable for adjusting the OCV at the welding site.(For Codes below 10911.)

Remote Control Kit (K924-5) - Contains remote control rheostat and 100 ft. (30.5 m) cable for adjusting the OCV at the welding site. (For Codes 10911 and above.)

Remote Control Kit (K2464-1) - Contains remote control rheostat (for adjusting the CC "STICK OVC), remote control potentiometer (for adjusting the CV "WIRE" OCV) and 100 ft. (30.5 m) cable.

TIG OPTIONS

TIG Module (K930-2) - Provides high frequency and shielding gas control for AC and DC GTAW (TIG) welding applications. Its compact case is designed for easy carrying, complete with a handle. High frequency bypass is built in.The K938-1 Contactor Kit must be field installed in the TIG Module when used with a ZR-10. Additionally, the K936-3 control cable is required if remote control is used. If remote control is not used the K936-4 control cable is required.

PTA-26V TIG Torch K1783-9-Air cooled 200 amptorch equipped with valve for gas flow control. 25Ft. length.

Magnum Parts Kit For PTA-26V TIG Torch KP509

Remote Control Cable (K936-4) - Control cable for connecting the K930-2 TIG Module to a ZR-10 not equipped with a K892-1 Remote Kit. 9-Socket to a grounded 115 V plug and a 6 pin MS-connector. (Contains circuits 31, 32, and ground)

Arc Start Switch K814

Contactor Kit K938-1

Control Cable Extension K937-45-Cable is 45Ft. in length.

Water Valve Kit K844-1-For use with a water-cooled TIG torch. Installs inside TIG Module.

Wire Feed Module (K623-1) - Provides constant voltage (CV) output with improved arc stability for Innershield welding. Excellent for MIG welding. Recommended wire feeders are the LN-7, LN-23P and LN-25. (Factory installed on the K1643-2).

LN-25 Wire Feeder K449-Portable CC/CV unit for flux-cored and MIG welding. Includes Gas Solenoid & Internal Contactor. Requires Wire Feed Module.

Remote Voltage Control Kit for LN-25 K444-2 Provides 25 ft. (7.5m) of remote output voltage control and output jumper (2 and 4) for machines having 14 pin MS-type connector.

Magnum® 350 Innershield Gun (for LN-25)K126-2- For self-shielded wire with 15 ft. (4.5m) cable. For .062-3/32" (1.6-2.8mm) wire.

Magnum® 200 MIG Gun (for LN-25)K497-3-With 15 ft. (4.5m) cable. For .025 (0.6m) wire.

Magnum Gun Connector KiT-Connects Magnum 200 MIG gun to LN-25 Wire Feeder.

LN-23P Wire Feeder K316L-1-Portable CV unit for Innershield pipe welding. Control cable operates contactor inside Wire Feed Module for "cold" electrode. Requires LN-23P Adapter Kit (K350-1) and Gun and Cable Assembly.

LN-23P Adapter Kit K350-1-Required to adapt LN-23P to any Lincoln power source. Makes 14 pin connection at power source.

Magnum® 250 Innershield Gun (for LN-23P) K355-10-For lighter weight and easier handling. Rated 250 amps, 60% duty cycle. For .068 through 5/64" (1.7 through 2.0 mm) Innershield wire and includes reduced speed switch. For pipe welding, an M11476 62° gun tube is recommended.

62° gun tube for Pipe Welding KP1909-1- Recommended modification for K355-X or K345-x guns with 90° gun tubes. Compatible with K126-1,-2,K264_8 and K355-10.

SPOOL GUN WELDER

Magnum Spool Gun K487-25-Hand held semiautomatic wire feeder requires SG Control Module. 25 ft. length.

SG Control Module K488-The interface between the power source and the spool gun. Provides control of wire speed and gas flow.

Input Cable K691-10.-For Lincoln engine drives with 14-pin MS-type connection, separate 115V NEMA receptacle and output stud connections. 10 ft. length.

Return to Section TOC
Return to Master TOC

NOTES

Return to Section TOC
Return to Master TOC
Return to Section TOC
Return to Master TOC
Return to Section TOC
Return to Master TOC

TABLE OF CONTENTS - MAINTENANCE SECTION

Maintenance D1

Maintenance D1.2

Idler Maintenance D1.3

Engine Service D1.4/D1.5

GFCI Receptacle Testing & Resetting D1.6

Major Component Location D1.7

Return to Master TOC

Return to Master TOC

Return to Master TOC

MAINTENANCE

⚠ WARNING

Have qualified personnel do the maintenance work. Turn the engine off before working inside the machine. In some cases, it may be necessary to remove safety guards to perform required maintenance. Remove guards only when necessary and replace them when the maintenance requiring their removal is complete. Always use the greatest care when working near moving parts.

Do not put your hands near the engine cooling blower fan. If a problem cannot be corrected by following the instructions, take the machine to the nearest Lincoln Field Service Shop.

ELECTRIC SHOCK can kill.
- **Do not touch electrically live parts or electrode with skin or wet clothing.**
- **Insulate yourself from work and ground**
- **Always wear dry insulating gloves.**

ENGINE EXHAUST can kill.
- **Use in open, well ventilated areas or vent exhaust outside.**

MOVING PARTS can injure.
- **Do not operate with doors open or guards off.**
- **Stop engine before servicing.**
- **Keep away from moving parts.**

See additional warning information at front of this operator's manual.

General Instructions

1. Blow out the welder and controls with an air hose at least once every two months. In particularly dirty locations, this cleaning may be necessary once a week. Use low pressure air to avoid driving dirt into the insulation.

2. "Current Range Selector" contacts should not be greased. To keep the contacts clean, rotate the current control through its entire range frequently. Good practice is to turn the handle from maximum to minimum setting twice each morning before starting to weld.

3. Put a drop of oil on the "Current Range Selector" shaft at least once every month.

4. When necessary, remove the sediment bowl, if so equipped, from beneath the fuel tank and clean out any accumulated dirt and water.

5. Follow the engine service schedule in this manual and the detailed maintenance and troubleshooting in the engine manufacturer's manual.

Cooling System

The Classic® 300 D is equipped with a pressure radiator. Keep the radiator cap tight to prevent loss of coolant. Clean and flush the cooling system periodically to prevent clogging the passage and overheating the engine. When antifreeze is needed, always use the permanent type. Capacity = 9.5 qts (9.0 Ltrs.).

Bearings

This welder is equipped with a double-shielded ball bearing having sufficient grease to last indefinitely under normal service. Where the welder is used constantly or in excessively dirty locations, it may be necessary to add one half ounce of grease per year. A pad of grease one inch wide, one inch long, and one inch high weighs approximately one half ounce. Overgreasing is far worse than insufficient greasing.

When greasing the bearings, keep all dirt out of the area. Wipe the fittings completely clean and use clean equipment. More bearing failures are caused by dirt introduced during greasing than from insufficient grease.

Commutator and Brushes

⚠ WARNING

Uncovered rotating equipment can be dangerous. Use care so your hands, hair, clothing or tools do not catch in the rotating parts. Protect yourself from particles that may be thrown out by the rotating armature when stoning the commutator.

Shifting of the commutator brushes may result in:
- Change in machine output
- Commutator damage
- Excessive brush wear

Periodically inspect the commutator, slip rings, and brushes by removing the covers. DO NOT remove or replace these covers while the machine is running. Commutators and slip rings require little attention. However, if they are black or appear uneven, have them cleaned by an experienced maintenance man using fine sandpaper or a commutator stone. Never use emery cloth or paper for this purpose.

Return to Section TOC
Return to Master TOC

Replace brushes when they wear within 1/4" of the pigtail. A complete set of replacement brushes should be kept on hand. Lincoln brushes have a curved face to fit the commutator. Have an experienced maintenance man seat these brushes by lightly stoning the commutator as the armature rotates at full speed until contact is made across the full face of the brushes. After stoning, blow out the dust with low pressure air.

To seat slip ring brushes, position the brushes in place. Then slide one end of a piece of fine sandpaper between slip rings and brushes with the coarse side against the brushes. With slight additional finger pressure on top of the brushes, pull the sandpaper around the circumference of the rings - in direction of rotation only - until brushes seat properly. In addition, stone slip ring with a fine stone. Brushes must be seated 100%.

Arcing or excessive exciter brush wear indicates a possible misaligned shaft. Have an authorized Field Service Shop check and realign the shaft.

Idler Maintenance

⚠ CAUTION

Before doing electrical work on the idler printed circuit board, disconnect the battery.

When installing a new battery or using a jumper battery to start the engine, be sure the battery polarity is connected properly. The correct polarity is **negative** ground. Damage to the engine alternator and the printed circuit board can result from incorrect connection.

1. The solenoid plunger must work freely and not bind. Dust the plunger about once a year with graphite powder.

2. Proper operation of the idler requires good grounding of the printed circuit board, reed switch, and battery.

3. Idler solenoid is activated for high idle.

4. If desired, the welder can be used without automatic idling by setting the "Idler" switch to the "High" position.

Nameplates

Whenever routine maintenance is performed on this machine - or at least yearly - inspect all nameplates and labels for legibility. Replace those which are no longer clear. Refer to the parts list for the replacement item number.

Purging Air from Fuel System (Perkins 104-22 Engine)

⚠ WARNING

Keep fuel clear of open flames or arcs, allow engine to cool before working on the fuel system. Wipe up any spilled fuel and do not start engine until fumes clear.

If the engine is running rough and you suspect air has been trapped in the fuel system, (e.g. the engine was allowed to run out of fuel) perform the following steps using qualified personnel:

1. Loosen by two or three turns, the vent screw (Figure D1.3) on the fuel inlet connection.

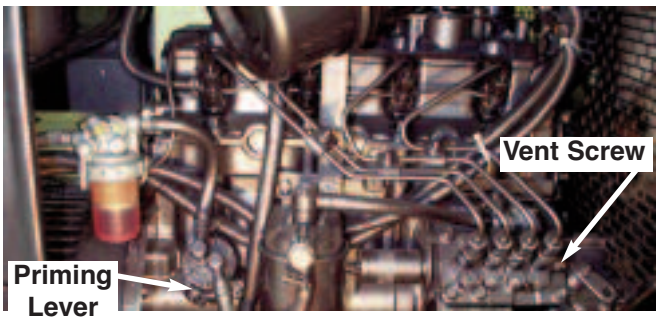

FIGURE D1.3

2. **For Engines Equipped with a mechanical fuel pump:** Operate the priming lever on the fuel lift pump until fuel, free of air, flows from the vent point. Tighten the vent screw. If the pump is at the point of maximum lift, it will not be possible to operate the priming lever. If this occurs, turn the crankshaft one revolution.
   For Engines Equipped with an electric fuel pump: Operate the electric fuel pump by turning the "Ignition" switch "ON" until fuel, free of air, flows from the vent point. Tighten the vent screw.

3. Contact your Perkins Engine repair facility if problems persist.

Return to Section TOC
Return to Master TOC

Return to Section TOC
Return to Master TOC

FOR CODES 10658 AND BELOW

ENGINE SERVICE

EVERY DAY OR EVERY 8 HOURS	FIRST SERVICE-(20 / 50 HOURS)	EVERY 100 HOURS OR 3 MONTHS	EVERY 200 HOURS OR 6 MONTHS	EVERY 400 HOURS OR 12 MONTHS	EVERY 600 HOURS OR 18 MONTHS	MAINTENANCE ITEM	TYPE OR QUANTITY
						ENGINE SERVICE (NOTE 2)	
I						Coolant level	
				I		Concentration of antifreeze	50/50 Water/Ethylene Glycol
					R	Coolant (NOTE 3)	9.5qrts, (9.0L)
I						Engine oil level (NOTE 1)	
	R	R				Engine oil (NOTE 1 & 3)	8.7qrts, (8.2L) (including filter)
	R	R				Engine oil filter	Perkins #140517000
	C	C				Drain water separator & fuel strainer	
			R			Fuel filter canister	Perkins #1300366120
I						Tension of alternator drive belt	
				I		Alternator drive belt wear	
					R	Alternator drive belt	Perkins # 080109080
	C	C				Air filter (earlier check may be req'd.)	
				R		Air filter element	Donaldson #P181050 or Nelson #70206N
		I				Check and adjust idle speed	
					I	Tighten cylinder head	
					I	Valve clearances	Intake .008", exhaust .008"
					I	Electrical systems	
					I	All nuts and bolts for tightness	
				I		Injector performance	Contact Perkins
I						Leaks or engine damage	
				I		Battery	BCI Group 24

I = Inspect C = Clean R = Replace

NOTES:

(1) Consult Engine Operators Manual for oil recommendations.

(2) Consult Engine Operators Manual for additional maintenance schedule information.

(3) Fill slowly! Ensure correct quantity is used.

Above operations to be carried out by trained personnel with reference to the workshop manual where necessary.
These preventive maintenance periods apply to average conditions of operation.
If necessary use shorter periods.

5/06
S20919-2

FOR CODES 10911 AND ABOVE

ENGINE SERVICE

EVERY DAY OR EVERY 8 HOURS	FIRST SERVICE-(20 / 50 HOURS)	EVERY 100 HOURS OR 3 MONTHS	EVERY 200 HOURS OR 6 MONTHS	EVERY 400 HOURS OR 12 MONTHS	EVERY 600 HOURS OR 18 MONTHS	ENGINE SERVICE (NOTE 2)	
						MAINTENANCE ITEM	TYPE OR QUANTITY
I						Coolant level	
				I		Concentration of antifreeze	50/50 Water/Ethylene Glycol
					R	Coolant (NOTE 3)	9.5qrts., 9.0L
I						Engine oil level (NOTE 1)	
	R	R				Engine oil (NOTE 1 & 3)	8.7qrts, 8.2L (including filter)
	R	R				Engine oil filter	Perkins #140517000
	C	C				Drain water separator & fuel strainer	
				R		Fuel filter canister	Perkins #26560017
I						Tension of alternator drive belt	
				I		Alternator drive belt wear	
					R	Alternator drive belt	Perkins #080109080
	C	C				Air filter (earlier check may be req'd.)	
				R		Air filter element	Donaldson #P181050, Nelson #70206N
		I				Check and adjust idle speed	
					I	Tighten cylinder head	
					I	Valve clearances	Intake .008", exhaust .008"
					I	Electrical systems	
					I	All nuts and bolts for tightness	
				I		Injector performance	Contact Perkins
I						Leaks or engine damage	
				I		Battery	

I = Inspect C = Clean R = Replace

Notes:

(1) Consult Engine Operators Manual for oil recommendations.
(2) Consult Engine Operators Manual for additional maintenance schedule information.
(3) Fill slowly! Ensure correct quantity is used.

Above operations to be carried out by trained personnel with reference to the workshop manual where necessary.
These preventive maintenance periods apply to average conditions of operation.
If necessary use shorter periods.

S25557

Return to Section TOC
Return to Master TOC

Return to Section TOC
Return to Master TOC

GFCI RECEPTACLE TESTING AND RESETTING PROCEDURE

The GFCI receptacle should be properly tested at least once every month or whenever it is tripped. To properly test and reset the GFCI receptacle:

- If the receptacle has tripped, first carefully remove any load and check it for damage.
- If the equipment has been shut down, it must be restarted.
- The equipment needs to be operating at high idle speed and any necessary adjustments made on the control panel so that the equipment is providing at least 80 volts to the receptacle input terminals.
- The circuit breaker for this receptacle must not be tripped. Reset if necessary.
- Push the "Reset" button located on the GFCI receptacle. This will assure normal GFCI operation.
- Plug a night-light (with an "ON/OFF" switch) or other product (such as a lamp) into the GFCI receptacle and turn the product "ON".
- Push the "Test" button located on the GFCI receptacle. The night-light or other product should go "OFF".
- Push the "Reset" button, again. The light or other product should go "ON" again.

If the light or other product remains "ON" when the "Test" button is pushed, the GFCI is not working properly or has been incorrectly installed (miswired). If your GFCI is not working properly, contact a qualified, certified electrician who can assess the situation, rewire the GFCI if necessary or replace the device.

1. Case Front Assembly
2. Engine Assembly
3. Radiator Assembly
4. Fuel Tank & Mounting
5. Base & Lift Bale Assembly
6. Welding Generator & Coupling (1 of 2)
7. Welding Generator & Coupling (2 of 2)
8. Solenoid Assembly
9. Roof & Doors
10. Alternator Brush Holder
11. Generator Brush Holder

FIGURE D1.7 - MAJOR COMPONENT LOCATION

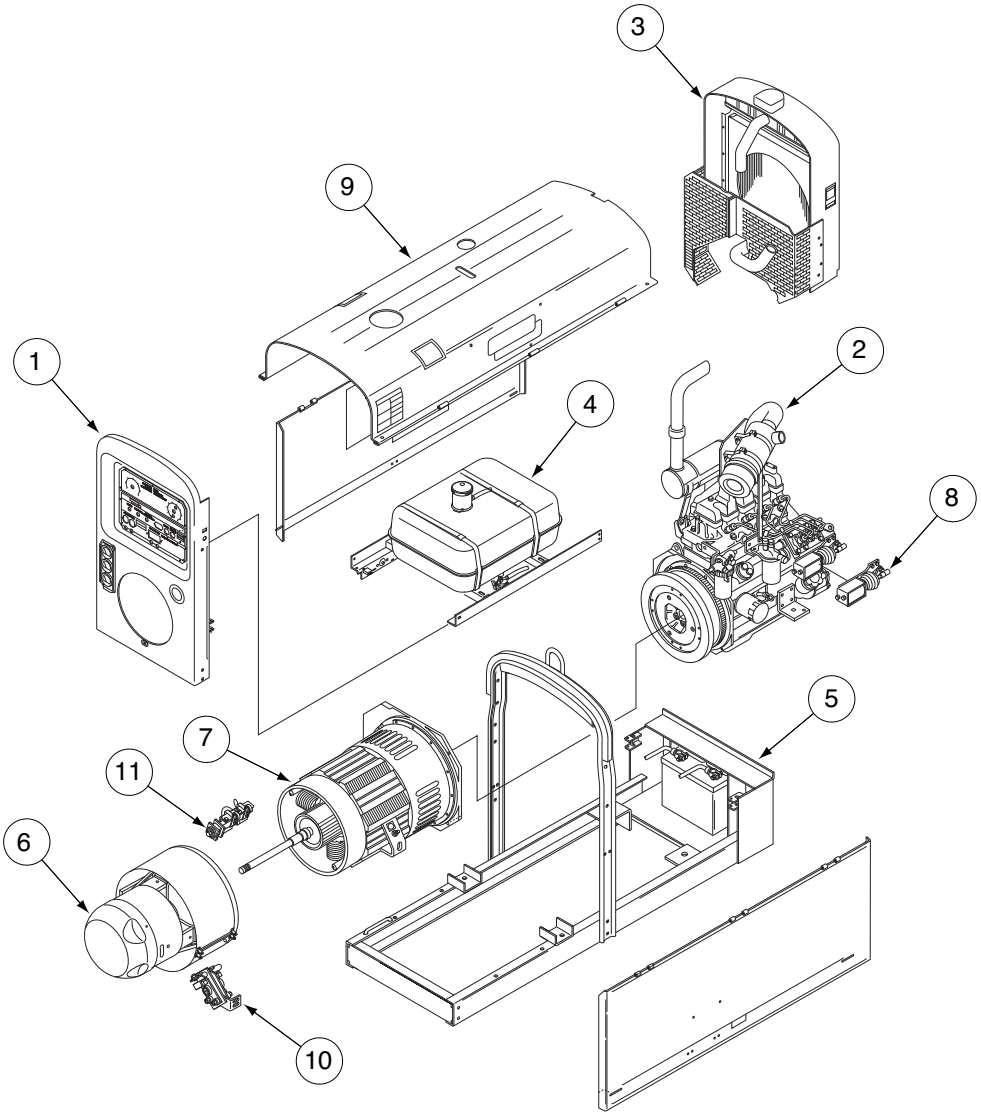

Return to Section TOC
Return to Master TOC

NOTES

Return to Section TOC
Return to Master TOC
Return to Section TOC
Return to Master TOC
Return to Section TOC
Return to Master TOC

TABLE OF CONTENTS - INSTALLATION SECTION

Installation A2

Technical Specifications A2.2

General Description A2.3

Pre-Operation Installation A2.4

Vehicle Mounting A2.5

Polarity Control & Cable Sizes A2.5

Battery Charging A2.6

Return to Master TOC
Return to Master TOC
Return to Master TOC

Return to Section TOC
Return to Master TOC

TECHNICAL SPECIFICATIONS - CLASSIC® 300D PERKINS

INPUT - DIESEL ENGINE

Make/Model	Description	Speed (RPM)	Displacement	Starting System	Capacities
Perkins 404C-22	4 Cylinder 4 Cycle Naturally Aspirated Water-Cooled Diesel Engine Cast Iron Cylinder, Block/Crankcase	High Idle 1800 Low Idle 1400 Full Load 1725	135.6 cu. in (2.2 ltrs) **Bore x Stroke** 3.43" x 3.64" 32.7HP @1800 RPM	12VDC battery (Group 24, 650 cold crank amps) 2.0 KW Starter 55 A. Alternator w/ built in reg. (For Codes 11111 and Below) 65 A. Alternator w/ built in reg. (For Codes 11248 and Above)	Fuel: 15 gal. 57 L. Oil: 8.45 Qts. 8 L. Coolant: 9.5 Qts. 9.0 L.

RATED OUTPUT @ 104°F(40°C) - WELDER

DESCRIPTION	RATED DC OUTPUT * VOLTS @ RATED AMPS	Duty CYCLE	DC CURRENT RANGE Fine Adjustments in each Range
300 Amp DC Welder All Copper Windings Pure DC Power Generator	30V @ 250A 32V @ 300A 99V DC Max. OCV @ 1800RPM	100% 60%	40-350 Amps 220-Max. 160-240 120-190 80-130 Min.-90

RATED OUTPUT @ 104°F(40°C) - GENERATOR

Auxiliary Power (1)
3,000 Watts Continuous, 60 Hz AC 26 Amps @ 115V 13 Amps @ 230V

PHYSICAL DIMENSIONS (2)

MODEL	HEIGHT	WIDTH	DEPTH	WEIGHT
K1643-3 CSA w/o Wire Feed Module (Codes 11110, 11248, 11280)	45.5 in. (1156 mm)	24.00 in. (610 mm)	65.0 in. (1651 mm	1354 lbs. (616 kg)
K1643-4 CSA w/ Wire Feed Module (Codes 11111, 11249, 11281)				1389lbs. (630 kg)

* Based on a 10 min. period.

(1) Output rating in watts is equivalent to volt-amperes at unity power factor. Output voltage is within ± 10% at all loads up to rated capacity. When welding, available auxiliary power will be reduced.

(2) Height to top of exhaust elbow.

Return to Section TOC
Return to Master TOC

GENERAL DESCRIPTION

The Classic® 300D Perkins is a heavy duty, engine driven, DC arc welding power source, capable of providing constant current output for stick welding or DC TIG welding. This welder is wound with all copper coils, rated at 300 amps/32 Volts, and provides other Classic® features such as improved door latches and stainless hinges. With the addition of the optional K623-1 Wire Feed Module™, the Classic® 300D Perkins will provide constant voltage output for running the LN-7, LN-23P, or LN-25 wire feeders. (The Wire Feed Module is factory installed on the K1643-4). The optional K924-5 Remote Control Kit, provides a remote control rheostat for remote fine current and open circuit voltage adjustment. ***See Section C*** for description.

The Classic® 300D Perkins has an Electronic Engine Protection System. In the event of sudden low oil pressure or high coolant temperature, the engine immediately shuts down. The Classic® 300D Perkins has a current range of 40-350 DC amps with output ratings as follows:

RATED OUTPUT	DUTY CYCLE
250A @ 30V	100%
300A @ 32V	60%

These units are also capable of providing 3 KVA of 115/230 volts of 60 cycle AC auxiliary power.

The Classic® 300D Perkins uses the Perkins 404C-22 industrial water-cooled diesel engine.

DESIGN FEATURES

Control Panel

Both the engine and the welder controls are located on one recessed panel at the exciter end of the machine. The welder controls consist of a five step “Current Range Selector” switch and a “Fine Current Adjustment” rheostat. The welder is equipped with a “Start” button, an “Ignition” switch, an “Idler” control switch, and a “Glow Plug” button for easier cold weather starting.

The control panel also contains an engine temperature gauge, a battery charging ammeter, an oil pressure gauge, for auxiliary power one three prong grounding type receptacles, one GFCI receptacle and circuit breakers for protection.

All Copper Windings - For long life and dependable operation.

Engine Idler - The Classic® 300D Perkins is equipped with an electronic automatic engine idler. It automatically increases and decreases engine speed **when starting and stopping welding or using auxiliary power**. A built-in time delay permits changing electrodes before the engine slows to its low idle speed. The “Idler” control switch on the panel locks the idler in high idle position when desired.

Auxiliary Power - 3.0 KVA of nominal 115/230V, 60Hz, AC. Output voltage is maintained within ± 10% at all loads up to rated capacity. (See ***Optional Features Section C*** for Power Plug Kit.)

GFCI Receptacle - One UL approved 115V ground fault circuit interrupter duplex type receptacle is standard. See the ***MAINTENANCE*** section for detailed information on testing and resetting the GFCI receptacle.

Welder Enclosure - The complete welder is rubber mounted on a rugged steel “C” channel base.

The output terminals are placed at the side of the machines so that they are protected by the door. The output terminals are labeled (+) and (-).

Cranking System - A 12 volt electric starter is standard.

Air Cleaner - Heavy duty two stage dry type.

Muffler - A muffler and stainless steel exhaust outlet elbow are standard.

Engine Hour Meter - A meter to record hours of operation.

Engine Protection - The system shuts the engine down in the event of sudden low oil pressure or high coolant temperature. A warning light on the control panel will indicate such a fault. To reset the engine for restarting, turn the ignition switch off then on.

Oil Drain Valve - A ball valve, hose and clamp are standard.

Remote Control - The Remote / Local Switch and Receptacle are standard.

Return to Section TOC
Return to Master TOC

PRE-OPERATION INSTALLATION

⚠ WARNING

Do not attempt to use this equipment until you have thoroughly read the engine manufacturer's manual supplied with your welder. It includes important safety precautions, detailed engine starting, operating and maintenance instructions, and parts lists.

ELECTRIC SHOCK can kill.
- **Do not touch electrically live parts or electrode with skin or wet clothing.**
- **Insulate yourself from work and ground**
- **Always wear dry insulating gloves.**

ENGINE EXHAUST can kill.
- **Use in open, well ventilated areas or vent exhaust outside.**

MOVING PARTS can injure.
- **Do not operate with doors open or guards off.**
- **Stop engine before servicing.**
- **Keep away from moving parts.**

See additional warning information at the front of this operator's manual.

EXHAUST SPARK ARRESTER

Some federal, state or local laws may require that engines be equipped with exhaust spark arresters when they are operated in certain locations where unarrested sparks may present a fire hazard. The standard muffler included with this welder does not qualify as a spark arrester. When required by local regulations, a suitable spark arrester must be installed and properly maintained.

⚠ CAUTION

Use of an incorrect arrester may lead to engine damage or performance loss. Contact the engine manufacturer for specific recommendations.

LOCATION / VENTILATION

Always operate the welder with the doors closed. Leaving the doors open changes the designed air flow and may cause overheating.

The welder should be located to provide an unrestricted flow of clean, cool air. Also, locate the welder so that engine exhaust fumes are properly vented to an outside area.

⚠ CAUTION

DO NOT MOUNT OVER COMBUSTIBLE SURFACES.

Where there is a combustible surface directly under stationary or fixed electrical equipment, the surface shall be covered with a steel plate at least .06"(1.6mm) thick, which shall extend not more than 5.90"(150mm) beyond the equipment on all sides.

MACHINE GROUNDING

According to the United States National Electrical Code, the frame of this portable generator is not required to be grounded and is permitted to serve as the grounding means for cord connected equipment plugged into its receptacle.

Some state, local, or other codes or unusual operating circumstances may require the machine frame to be grounded. It is recommended that you determine the extent to which such requirements may apply to your particular situation and follow them explicitly. A machine grounding stud marked with the symbol ⏚ is provided on the welding generator frame foot. In general, if the machine is to be grounded, it should be connected with a #8 or larger copper wire to a solid earth ground such as a metal water pipe going into the ground for at least ten feet and having no insulated joints, or to the metal framework of a building which has been effectively grounded. The U.S. National Code lists a number of alternate means of grounding electrical equipment.

LIFT BAIL

A lift bail is provided for lifting with a hoist.

⚠ WARNING

- **Lift only with equipment of adequate lifting capacity.**
- **Be sure machine is stable when lifting.**
- **Do not lift this machine using lift bail if it is equipped with a heavy accessory such as trailer or gas cylinder.**

FALLING EQUIPMENT can cause injury.

- **Do not lift machine if lift bail is damaged.**
- **Do not operate machine while suspended from lift bail.**

TRAILER (SEE *OPTIONAL FEATURES*)

If the user adapts a non-Lincoln trailer, he must assume responsibility that the method of attachment and usage does not result in a safety hazard nor damage the welding equipment. Some of the factors to be considered are as follows:

1. Design capacity of trailer vs. weight of Lincoln equipment and likely additional attachments.

2. Proper support of, and attachment to, the base of the welding equipment so there will be no undue stress to the framework.

3. Proper placement of the equipment on the trailer to ensure stability side to side and front to back when being moved and when standing by itself while being operated or serviced.

4. Typical conditions of use, i.e., travel speed, roughness of surface on which the trailer will be operated; environmental conditions, likely maintenance.

5. Conformance with federal, state and local laws. (1)

(1) Consult your federal, state and local laws regarding specific requirements for use on public highways.

VEHICLE MOUNTING

⚠ WARNING

Improperly mounted concentrated loads may cause unstable vehicle handling and tires or other components to fail.

- **Only transport this Equipment on serviceable vehicles which are rated and designed for such loads.**
- **Distribute, balance and secure loads so vehicle is stable under conditions of use.**
- **Do not exceed maximum rated loads for components such as suspension, axles and tires.**
- **Use appropriate nuts bolts and lockwashers to attach the equipment base to the metal bed or frame of vehicle.**
- **Follow vehicle manufacturer's instructions.**

POLARITY CONTROL AND CABLE SIZES

With the engine off, route the electrode and work cables through the strain relief bracket on the base and connect to the studs located below the fuel tank mounting rail. (See size recommendations below.) For **positive** polarity, connect the electrode cable to the terminal marked **"+"**. For **Negative** polarity, connect the electrode cable to the **"-"** stud. These connections should be checked periodically and tightened if necessary.

When welding at a considerable distance from the welder, be sure you use ample sized welding cables.

RECOMMENDED COPPER CABLE SIZES			
		Cables Sizes for Combined Length of Electrode Plus Work Cable	
Amps	Duty Cycle	Up to 200ft.(61m)	200 to 250ft. (61 to 76m)
250	100%	1	1/0
300	60%	1/0	2/0

PRE-OPERATION SERVICE

⚠ CAUTION

READ the engine operating and maintenance instructions supplied with this machine.

⚠ WARNING

DIESEL FUEL can cause fire

- **Stop engine while fueling.**
- **Do not smoke when fueling.**
- **Keep sparks and flame away from tank.**
- **Do not leave unattended while fueling.**
- **Wipe up spilled fuel and allow fumes to clear before starting engine.**
- **Do not overfill tank, fuel expansion may cause overflow.**

DIESEL FUEL ONLY

OIL

This unit is supplied from the factory with the engine crankcase filled with a high quality SAE 10W/30 oil. This oil should be acceptable for most typical ambient temperatures. Consult the engine operation manual for specific engine manufacturer's recommendations. Upon receipt of the welder, check the engine dipstick to be sure the oil is at the "full" mark. DO NOT overfill.

FUEL

Fill the fuel tank with the grade of fuel recommended in the Engine Operator's manual. Make sure the fuel valve on the water separator is in the open position.

COOLING SYSTEM

The radiator has been filled at the factory with a 50-50 mixture of ethylene glycol antifreeze and water. Check the radiator level and add a 50-50 solution as needed (see engine manual or antifreeze container for alternate antifreeze recommendations).

Return to Section TOC
Return to Master TOC

BATTERY CHARGING

⚠ WARNING

GASES FROM BATTERY can explode.
- Keep sparks, flame and cigarettes away.

BATTERY ACID can burn eyes and skin.
- Wear gloves and eye protection and be careful when boosting, charging or working near battery.

To prevent EXPLOSION when:

a) Installing a new battery - disconnect the negative cable from the old battery first and connect the negative cable to the new battery last.
b) Connecting a battery charger - remove the battery from the welder by disconnecting the negative cable first, then the positive cable and battery clamp. When reinstalling, connect the negative cable last.
c) Using a booster - connect the positive lead to the battery first, then connect the negative lead to the ground lead on the base.

To prevent ELECTRICAL DAMAGE when:

a) Installing a new battery.
b) Using a booster.

Use correct polarity - **Negative Ground**.

- To prevent BATTERY DISCHARGE, if you have an ignition switch, turn it off when engine is not running.
- To prevent BATTERY BUCKLING, tighten nuts on battery clamp until snug.

The Classic® 300D Perkins is equipped with a wet charged battery. The charging current is automatically regulated when the battery is low (after starting the engine) to a trickle current when the battery is fully charged.

When replacing, jumping or otherwise connecting the battery to the battery cables, the proper polarity must be observed. This system is **NEGATIVE GROUND**.

Return to Section TOC
Return to Master TOC

TABLE OF CONTENTS - OPERATION SECTION

Operation B2

Engine Operation B2.2

Cold Weather Starting B2.2

Engine Break-In B2.3

Welder Operation B2.3

Idler Operation B2.4

Return to Master TOC
Return to Master TOC
Return to Master TOC

Return to Section TOC
Return to Master TOC

ENGINE OPERATION

⚠ WARNING

Do not attempt to use this equipment until you have thoroughly read the engine manufacturer's manual supplied with your welder. It includes important safety precautions, detailed engine starting, operating and maintenance instructions, and parts lists.

ELECTRIC SHOCK can kill.
- **Do not touch electrically live parts or electrode with skin or wet clothing.**
- **Insulate yourself from work and ground**
- **Always wear dry insulating gloves.**

ENGINE EXHAUST can kill.
- **Use in open, well ventilated areas or vent exhaust outside.**

MOVING PARTS can injure.
- **Do not operate with doors open or guards off.**
- **Stop engine before servicing.**
- **Keep away from moving parts.**

See additional warning information at the front of this operator's manual.

Operate the welder with the doors closed. Leaving the doors open changes the designed air flow and can cause overheating.

STARTING THE CLASSIC® 300D PERKINS 404C-22 DIESEL ENGINE

1. Turn the "IDLER" switch to "HIGH".
2. Turn the "IGNITION" switch to "ON".
3. Press the Glow Plug button for 20 to 30 seconds. (maximum 60 seconds).
4. Press the Start button. When the engine starts running, release both buttons. If the engine fails to start in 20 seconds, wait 30 seconds and repeat the above procedure.
5. Observe the oil pressure. If no pressure shows within 30 seconds, stop the engine and consult the engine operating manual. To stop the engine, turn the "IGNITION" switch to "OFF".
6. If the engine protection warning light comes on during cranking or after start up, the "IGNITION" switch must be turned "OFF" to reset the engine protection system.
7. Allow the engine to run at high idle speed for several minutes to warm the engine. Stop the engine and recheck the oil level, after allowing sufficient time for the oil to drain into the pan. If the level is down, fill it to the full mark again. The engine controls were properly set at the factory and should require no adjusting when received.

COLD WEATHER STARTING:

With a fully charged battery and the proper weight oil, the engine should start satisfactorily even down to about -15°F (-26°C), it maybe desirable to install cold-starting aides.

Note: Extreme cold weather staring may require longer glow plug operation.

⚠ WARNING

Under NO conditions should ether or other starting fluids be used!

HIGH ALTITUDE OPERATION:

The engine will run correctly up to an altitude of 600m (2000ft.). If the engine is to be operated permanently at an altitude above this, the fuel consumption and exhaust emissions may be excessive.

Contact the Perkins Application Department for any engine adjustments that may be required.

STOPPING THE ENGINE

1. Turn the "IGNITION" switch to "OFF"

At the end of each day's welding, check the crankcase oil level, drain accumulated dirt and water from the water separator located on the fuel rail. Refill the fuel tank to minimize moisture condensation in the tank. Also, running out of fuel tends to draw dirt into the fuel system.

When hauling the welder between job sites, close the fuel feed valve on the separator located on the fuel rail.

If the fuel supply is cut off or runs out while the fuel pump is operating, air may be entrapped in the fuel distribution system. If this happens, bleeding of the fuel system may be necessary. Use qualified personnel to do this per the instructions in the ***MAINTENANCE*** section of this manual.

Return to Section TOC
Return to Master TOC

ENGINE BREAK-IN

Lincoln Electric selects high quality, heavy-duty industrial engines for the portable welding machines we offer. While it is normal to see a small amount of crankcase oil consumption during initial operation, excessive oil use, wet stacking (oil or tar like substance at the exhaust port), or excessive smoke is not normal.

Larger machines with a capacity of 350 amperes and higher, which are operated at low or no-load conditions for extended periods of time are especially susceptible to the conditions described above. To accomplish successful engine break-in, most diesel-powered equipment needs only to be run at a reasonably heavy load within the rating of the welder for some period of time during the engine's early life. However, if the welder is subjected to extensive light loading, occasional moderate to heavy loading of the engine may sometimes be necessary. Caution must be observed in correctly loading a diesel/generator unit.

1. Connect the welder output studs to a suitable resistive load bank. Note that any attempt to short the output studs by connecting the welding leads together, direct shorting of the output studs, or connecting the output leads to a length of steel will result in catastrophic damage to the generator and voids the warranty.
2. Set the welder controls for an output current and voltage within the welder rating and duty cycle. Note that any attempt to exceed the welder rating or duty cycle for any period of time will result in catastrophic damage to the generator and voids the warranty.
3. Periodically shut off the engine and check the crankcase oil level.

WELDER OPERATION

DUTY CYCLE

⚠ WARNING

ELECTRIC SHOCK can kill.
- **Do not touch electrically live parts or electrode with skin or wet clothing.**
- **Insulate yourself from work and ground.**

FUMES & GASES can be dangerous.
- **Keep your head out of the fumes.**
- **Use ventilation or exhaust to remove fumes from breathing zone.**

WELDING SPARKS can cause fire or explosion.
- **Keep flammable material away.**

ARC RAYS can burn.
- **Wear eye, ear, and body protection.**

The NEMA output rating of the Classic® 300D Perkins is 300 amperes at 32 arc volts on a 60% duty cycle (consult Specifications in this manual for alternate ratings). Duty cycle is based on a ten minute period; thus, the welder can be loaded at rated output for six minutes out of every ten minute period.

CONTROL OF WELDING CURRENT

⚠ CAUTION

DO NOT TURN THE "CURRENT RANGE SELECTOR" WHILE WELDING because the current may arc between the contacts and damage the switch.

The "Current Range Selector" provides five overlapping current ranges. The "Fine Current Adjustment" adjusts the current from minimum to maximum within each range. Open circuit voltage is also controlled by the "Fine Current Adjustment" permitting control of the arc characteristics.

A high open circuit voltage setting provides the soft "buttering" arc with best resistance to pop-outs preferred for most welding. To get this characteristic, set the "Current Range Selector" to the lowest setting that still provides the current you need and set the "Fine Current Adjustment" near maximum.

For example: to obtain 175 amps and a soft arc, set the "Current Range Selector" to the 190-120 position and then adjust the "Fine Current Adjustment" for 175 amps.

When a forceful "digging" arc is required, usually for vertical and overhead welding, use a higher "Current Range Selector" setting and lower open circuit voltage.

For example: to obtain 175 amps and a forceful arc, set the "Current Range Selector" to the 240-160 position and the "Fine Current Adjustment" setting to get 175 amps.

Some arc instability may be experienced with EXX10 electrodes when trying to operate with long arc techniques at settings at the lower end of the open circuit voltage range.

⚠ CAUTION

DO NOT attempt to set the "Current Range Selector" between the five points designated on the nameplate.

These switches have a spring loaded cam which almost eliminates the possibility of setting this switch between the designated points.

Return to Section TOC
Return to Master TOC

IDLER OPERATION

Start the engine with the "Idler" switch in the "High" position. Allow it to run at high idle speed for several minutes to warm the engine. See ***Specifications*** for operating speeds.

The idler is controlled by the "Idler" toggle switch on the welder control panel. The switch has two positions as follows:

1. In the "High" position, the idler solenoid deactivates, and the engine goes to high idle speed. The speed is controlled by the governor.

2. In the "Auto" / position, the idler operates as follows:

   a. When welding or drawing power for lights or tools (approximately 100 watts minimum) from the receptacles, the idler solenoid deactivates and the engine operates at high idle speed.

   b. When welding ceases or the power load is turned off, a preset time delay of about 15 seconds starts. This time delay cannot be adjusted.

   c. If the welding or power load is not re-started before the end of the time delay, the idler solenoid activates and reduces the engine to low idle speed.

AUXILIARY POWER

If a GFCI receptacle is tripped, See the ***MAINTENANCE*** section for detailed information on testing and resetting the GFCI receptacle.

The AC auxiliary power, supplied as a standard, has a rating of 3.0 KVA of 115/230 VAC (60 hertz).

With the 3.0 KVA, 115/230 VAC auxiliary power, one 115V GFCI and one 230V duplex, grounding type receptacles are provided. The circuit is protected with circuit breakers.

The rating of 3.0 KVA permits a maximum continuous current of 13 amps to be drawn from the 230 volt duplex receptacle. Or a total of 20 amps can be drawn from the 115 volt GFCI receptacle. The total combined load of all receptacles is not to exceed 3.0 KVA.

An optional power plug kit is available. When this kit is specified, the customer is supplied with a plug for each receptacle.

CLASSIC® 300D PERKINS WITH PERKINS 104-22 DIESEL ENGINE TYPICAL FUEL CONSUMPTION DATA

Low Idle (1400 RPM)-No Load @ 45 Volts	0.28 gal/hr (1.06 ltrs/hr)
High Idle (1800 RPM)-No Load @ 96.6 Volts	0.42 gal/hr (1.59 ltrs/hr)
3000 Watts	0.59 gal/hr (2.23 ltrs/hr)
250 Amps @ 30 Volts	1.03 gal/hr (3.90 ltrs/hr)
300 Amps @ 32 Volts	1.37 gal/hr (5.19 ltrs/hr)

TABLE OF CONTENTS - ACCESSORIES SECTION

Accessories C2

Options C2.2

Wire Feed Options C2.3

Return to Master TOC
Return to Master TOC
Return to Master TOC
Return to Master TOC

OPTIONAL FEATURES (Field Installed)

GENERAL OPTIONS

⚠ WARNING

Pipe Thawing with an arc welder can cause fire, explosion, damage to electric wiring or to the arc welder if done improperly. The use of an arc welder for pipe thawing is not approved by the CSA, nor is it recommended or supported by Lincoln Electric.

Power Plug Kit K802D
A power plug kit for the auxiliary power receptacles is available. (Provides a plug for each receptacle.)

Spark Arrestor Kit K903-1
Includes a heavy gage steel, approved spark arrestor, clamp and adapter for mounting to the muffler exhaust pipe.

TRAILER K953-1
Two-wheeled trailer with optional fender and light package. For highway use, consult applicable federal, state, and local laws regarding possible additional requirements. There is a choice of 2 hitches, a fender & a light package.

Ball Hitch K958-1
Lunette Eye Hitch K958-2
Fender & Light Kit K959-1
Cable Rack K965-1

Service Indicator Kit K1858-1
Provides a GO / NO-GO visual indication of air cleaner element useful service life. Filter service based on restriction readings allows the longest life possible from the filter and best engine protection.

STICK OPTIONS

ACCESSORY SET K704
Includes 35 feet (10 m) of electrode cable and 30 feet (9 m) of work cable, headshield, work clamp and electrode holder. Cable is rated at 500 amps, 60% duty cycle.

Remote Control Kit K924-5
Contains remote control rheostat and 100 ft. (30.5 m) cable for adjusting the OCV at the welding site.

TIG OPTIONS

TIG Module K930-2
Provides high frequency and shielding gas control for AC and DC GTAW (TIG) welding applications. Its compact case is designed for easy carrying, complete with a handle. High frequency bypass is built in. Additionally, the K936-3 control cable is required if remote control is used. If remote control is not used the K936-4 control cable is required.

PTA-26V TIG Torch K1783-9
Air cooled 200 amp torch equipped with valve for gas flow control. 25Ft. length.

Magnum Parts Kit For PTA-26V TIG Torch KP509

Control Cable K936-4 (required for TIG Module)
Control cable for connecting the K930-2 TIG Module.

Arc Start Switch K814 (required for TIG Module)
Comes with a 25ft.(7.6m) cable.
Attaches to the TIG torch for convenient finger control.

Contactor Kit K938-1 (required for TIG Module)
Provide “Cold” tungsten Tip when welding with the TIG Module.

Control Cable Extension K937-45
Allows the TIG Module to be operated at distances up to 200 ft. from the power source.Available in 45 ft. (13.7m).

Water Valve Kit K844-1
For use with a water-cooled TIG torch. Installs inside TIG Module.

Return to Section TOC
Return to Master TOC

WIRE FEEDER OPTIONS

Wire Feed Module K623-1
Provides constant voltage (CV) output with improved arc stability for Innershield welding. Excellent for MIG welding. Recommended wire feeders are the LN-7, LN-23P and LN-25. (Factory installed on the K1643-2).

LN-25 Wire Feeder K449

Portable CC/CV unit for flux-cored and MIG welding. Includes Gas Solenoid & Internal Contactor. Requires Wire Feed Module.

Remote Voltage Control Kit for LN-25 K444-2

Provides 25 ft. (7.5m) of remote output voltage control and output jumper (2 and 4) for machines having 14 pin MS-type connector.

Magnum® 350 Innershield Gun for LN-25 K126-2
For self-shielded wire with 15 ft. (4.5m) cable. For .062-3/32" (1.6-2.8mm) wire.

Magnum® 300 MIG Gun for LN-25 K1802-1

With 15 ft. (4.5m) cable. For .035"-.045" (0.9-1.2mm) gas shielded (Includes Connector Kit).

LN-23P Wire Feeder K316L-1

Portable CV unit for Innershield pipe welding. Control cable operates contactor inside Wire Feed Module for "cold" electrode. Requires LN-23P Adapter Kit (K350-1) and Gun and Cable Assembly.

LN-23P Adapter Kit K350-1

Required to adapt LN-23P to any Lincoln power source. Makes 14 pin connection at power source.

Magnum® 250 Innershield Gun for LN-23P K355-10

For lighter weight and easier handling. Rated 250 amps, 60% duty cycle. For .068 through 5/64" (1.7 through 2.0 mm) Innershield wire and includes reduced speed switch. For pipe welding, an M11476 62° gun tube is recommended.

62° gun tube for pipe welding KP1909-1

Recommended modification for K355-X or K345-x guns with 90° gun tubes. Compatible with K126-1,-2, K264-8 and K355-10.

Magnum Spool Gun K487-25

Hand held semiautomatic wire feeder requires SG Control Module. 25 ft. length.

SG Control Module K488 (For Magnum Spool Gun)

The interface between the power source and the spool gun. Provides control of wire speed and gas flow.

Input Cable K691-10 (For SG Control Module)

For Lincoln engine drives with 14-pin MS-type connection, separate 115V NEMA receptacle and output stud connections. 10 ft. length.

Return to Section TOC
Return to Master TOC

NOTES

Return to Section TOC
Return to Master TOC
Return to Section TOC
Return to Master TOC
Return to Section TOC
Return to Master TOC

TABLE OF CONTENTS - MAINTENANCE SECTION

Maintenance D-2

Safety Precautions D2.2

Idler Maintenance D2.3

Engine Service D2.4/D2.5

GFCI Receptacle Testing & Resetting D2.6

Major Component Location D2.7

Return to Master TOC

Return to Master TOC

Return to Master TOC

Return to Section TOC
Return to Master TOC

SAFETY PRECAUTIONS

⚠ WARNING

Have qualified personnel do the maintenance work. Turn the engine off before working inside the machine. In some cases, it may be necessary to remove safety guards to perform required maintenance. Remove guards only when necessary and replace them when the maintenance requiring their removal is complete. Always use the greatest care when working near moving parts.

Do not put your hands near the engine cooling blower fan. If a problem cannot be corrected by following the instructions, take the machine to the nearest Lincoln Field Service Shop.

ELECTRIC SHOCK can kill.
- **Do not touch electrically live parts or electrode with skin or wet clothing.**
- **Insulate yourself from work and ground**
- **Always wear dry insulating gloves.**

ENGINE EXHAUST can kill.
- **Use in open, well ventilated areas or vent exhaust outside.**

MOVING PARTS can injure.
- **Do not operate with doors open or guards off.**
- **Stop engine before servicing.**
- **Keep away from moving parts.**

See additional warning information at front of this operator's manual.

GENERAL INSTRUCTIONS

1. Blow out the welder and controls with an air hose at least once every two months. In particularly dirty locations, this cleaning may be necessary once a week. Use low pressure air to avoid driving dirt into the insulation.

2. "Current Range Selector" contacts should not be greased. To keep the contacts clean, rotate the current control through its entire range frequently. Good practice is to turn the handle from maximum to minimum setting twice each morning before starting to weld.

3. Put a drop of oil on the "Current Range Selector" shaft at least once every month.

4. Follow the engine service schedule in this manual and the detailed maintenance and troubleshooting in the engine manufacturer's manual.

COOLING SYSTEM

The Classic® 300D Perkins is equipped with a pressure radiator. Keep the radiator cap tight to prevent loss of coolant. Clean and flush the cooling system periodically to prevent clogging the passage and overheating the engine. When antifreeze is needed, always use the permanent type.

BEARINGS

This welder is equipped with a double-shielded ball bearing having sufficient grease to last indefinitely under normal service. Where the welder is used constantly or in excessively dirty locations, it may be necessary to add one half ounce of grease per year. A pad of grease one inch wide, one inch long, and one inch high weighs approximately one half ounce. Overgreasing is far worse than insufficient greasing.

When greasing the bearings, keep all dirt out of the area. Wipe the fittings completely clean and use clean equipment. More bearing failures are caused by dirt introduced during greasing than from insufficient grease.

COMMUTATOR AND BRUSHES

⚠ WARNING

Uncovered rotating equipment can be dangerous. Use care so your hands, hair, clothing or tools do not catch in the rotating parts. Protect yourself from particles that may be thrown out by the rotating armature when stoning the commutator.

Shifting of the commutator brushes may result in:
- Change in machine output
- Commutator damage
- Excessive brush wear

Periodically inspect the commutator, slip rings, and brushes by removing the covers. DO NOT remove or replace these covers while the machine is running. Commutators and slip rings require little attention. However, if they are black or appear uneven, have them cleaned by an experienced maintenance man using fine sandpaper or a commutator stone. Never use emery cloth or paper for this purpose.

Replace brushes when they wear within 1/4" of the pigtail. A complete set of replacement brushes should be kept on hand. Lincoln brushes have a curved face to fit the commutator. Have an experienced maintenance man seat these brushes by lightly stoning the commutator as the armature rotates at full speed until contact is made across the full face of the brushes. After stoning, blow out the dust with low pressure air.

To seat slip ring brushes, position the brushes in place. Then slide one end of a piece of fine sandpaper between slip rings and brushes with the coarse side against the brushes. With slight additional finger pressure on top of the brushes, pull the sandpaper around the circumference of the rings - in direction of rotation only - until brushes seat properly. In addition, stone slip ring with a fine stone. Brushes must be seated 100%.

Arcing or excessive exciter brush wear indicates a possible misaligned shaft. Have an authorized Field Service Shop check and realign the shaft.

IDLER MAINTENANCE

⚠ CAUTION

Before doing electrical work on the idler printed circuit board, disconnect the battery.

When installing a new battery or using a jumper battery to start the engine, be sure the battery polarity is connected properly. The correct polarity is **negative** ground. Damage to the engine alternator and the printed circuit board can result from incorrect connection.

1. Proper operation of the idler requires good grounding of the printed circuit board, reed switch, and battery.

2. Idler solenoid is activated for low idle.

3. If desired, the welder can be used without automatic idling by setting the "Idler" switch to the "High" position.

NAMEPLATES

Whenever routine maintenance is performed on this machine - or at least yearly - inspect all nameplates and labels for legibility. Replace those which are no longer clear. Refer to the parts list for the replacement item number.

PURGING AIR FROM FUEL SYSTEM (PERKINS 404C-22 ENGINE)

⚠ WARNING

Keep fuel clear of open flames or arcs, allow engine to cool before working on the fuel system. Wipe up any spilled fuel and do not start engine until fumes clear.

If the engine is running rough and you suspect air has been trapped in the fuel system, (e.g. the engine was allowed to run out of fuel) perform the following steps using qualified personnel:

1. Loosen by two or three turns, the vent screw (Figure D2.3) on the fuel inlet connection.

FIGURE D2.3

2. Operate the electric fuel pump by turning the "Ignition" switch "ON" until fuel, free of air, flows from the vent point. Tighten the vent screw.

3. Contact your Perkins Engine repair facility if problems persist.

Return to Section TOC
Return to Master TOC

Return to Section TOC
Return to Master TOC

SERVICE DECAL FOR CODES 11249 AND BELOW

ENGINE SERVICE

EVERY DAY OR EVERY 8 HOURS	FIRST SERVICE-(20 / 50 HOURS)	EVERY 100 HOURS OR 3 MONTHS	EVERY 250 HOURS OR 6 MONTHS	EVERY 500 HOURS OR 12 MONTHS	EVERY 1000 HOURS	ENGINE SERVICE (NOTE 2)	
						MAINTENANCE ITEM	TYPE OR QUANTITY
I						Coolant level	
			I			Concentration of antifreeze	50/50 Water/Ethylene Glycol
					R	Coolant (NOTE 3)	9.5qrts., 9.0L
I						Engine oil level (NOTE 1)	
	R			R		Engine oil (NOTE 1 & 3)	8.45Qrts, 8L (including filter)
	R			R		Engine oil filter	Perkins #140517050
C						Drain water separator & fuel strainer	
				R		Fuel filter canister	Perkins #2656613
			I			Tension of alternator drive belt	
			I			Alternator drive belt wear	
					R	Alternator drive belt	Perkins #080109107
C						Air filter(earlier check may be req'd.)	
				R		Air filter element	Donaldson #P821575
					R	Renew the engine breather	
					I	Tighten cylinder head	
					I	Valve clearances	Intake .008", exhaust .08"
					I	Electrical systems	
					I	All nuts and bolts for tightness	
				I		Injector performance	Contact Perkins
I						Leaks or engine damage	
				I		Battery	

I = Inspect C = Clean R = Replace

Notes:

(1) Consult Engine Operators Manual for oil recommendations.
(2) Consult Engine Operators Manual for additional maintenance schedule information.
(3) Fill slowly! Ensure correct quantity is used.

Above operations to be carried out by trained personnel with reference to the workshop manual where necessary.
These preventive maintenance periods apply to average conditions of operation.
If necessary use shorter periods.

C
S25953

SERVICE DECAL FOR CODES 11250 AND ABOVE

ENGINE SERVICE

EVERY DAY OR EVERY 8 HOURS
FIRST SERVICE - (20 / 50 HOURS)
EVERY 100 HOURS OR 3 MONTHS
EVERY 250 HOURS OR 6 MONTHS
EVERY 500 HOURS OR 12 MONTHS
EVERY 1000 HOURS

ENGINE SERVICE (NOTE 2)

						MAINTENANCE ITEM	TYPE OR QUANTITY
I						Coolant level	
			I			Concentration of antifreeze	50/50 Water/Ethylene Glycol
					R	Coolant (NOTE 3)	9.5qrts., 9.0L
I						Engine oil level (NOTE 1)	
	R			R		Engine oil (NOTE 1 & 3)	8.45qrts., 8L (including filter)
	R			R		Engine oil filter	Perkins #140517050
				R		Water Separator Element	Lincoln #M20840-A
C						Drain water separator & fuel strainer	
				R		Fuel filter canister	Perkins #2656813
			I			Tension of alternator drive belt	
			I			Alternator drive belt wear	
					R	Alternator drive belt	Perkins #980109107
C						Air filter (earlier check may be req'd)	
				R		Air filter element	Donaldson #P821575
					R	Renew the engine breather	
					I	Tighten cylinder head	
					I	Valve clearances	Intake .008", exhaust .008"
					I	Electrical systems	
					I	All nuts and bolts for tightness	
				I		Injector performance	Contact Perkins
I						Leaks or engine damage	
				I		Battery	

I = Inspect C = Clean R = Replace

Notes:
(1) Consult Engine Operators Manual for oil recommendations.
(2) Consult Engine Operators Manual for additional maintenance schedule information.
(3) Fill slowly! Ensure correct quantity is used.

Above operations to be carried out by trained personnel with reference to the workshop manual where necessary.
These preventative maintenance periods apply to average conditions of operation.
If necessary use shorter periods.

S26657 VM

Return to Section TOC
Return to Master TOC

GFCI RECEPTACLE TESTING AND RESETTING PROCEDURE

The GFCI receptacle should be properly tested at least once every month or whenever it is tripped. To properly test and reset the GFCI receptacle:

- If the receptacle has tripped, first carefully remove any load and check it for damage.
- If the equipment has been shut down, it must be restarted.
- The equipment needs to be operating at high idle speed and any necessary adjustments made on the control panel so that the equipment is providing at least 80 volts to the receptacle input terminals.
- The circuit breaker for this receptacle must not be tripped. Reset if necessary.
- Push the "Reset" button located on the GFCI receptacle. This will assure normal GFCI operation.
- Plug a night-light (with an "ON/OFF" switch) or other product (such as a lamp) into the GFCI receptacle and turn the product "ON".
- Push the "Test" button located on the GFCI receptacle. The night-light or other product should go "OFF".
- Push the "Reset" button, again. The light or other product should go "ON" again.

If the light or other product remains "ON" when the "Test" button is pushed, the GFCI is not working properly or has been incorrectly installed (miswired). If your GFCI is not working properly, contact a qualified, certified electrician who can assess the situation, rewire the GFCI if necessary or replace the device.

Return to Section TOC
Return to Master TOC

1. Case Front Assembly
2. Engine Assembly
3. Radiator Assembly
4. Fuel Tank & Mounting
5. Base & Lift Bale Assembly
6. Exciter & Stator
7. Welding Generator & Coupling
8. Roof & Doors
9. Generator Brush Holder

FIGURE D2.7 - MAJOR COMPONENT LOCATION

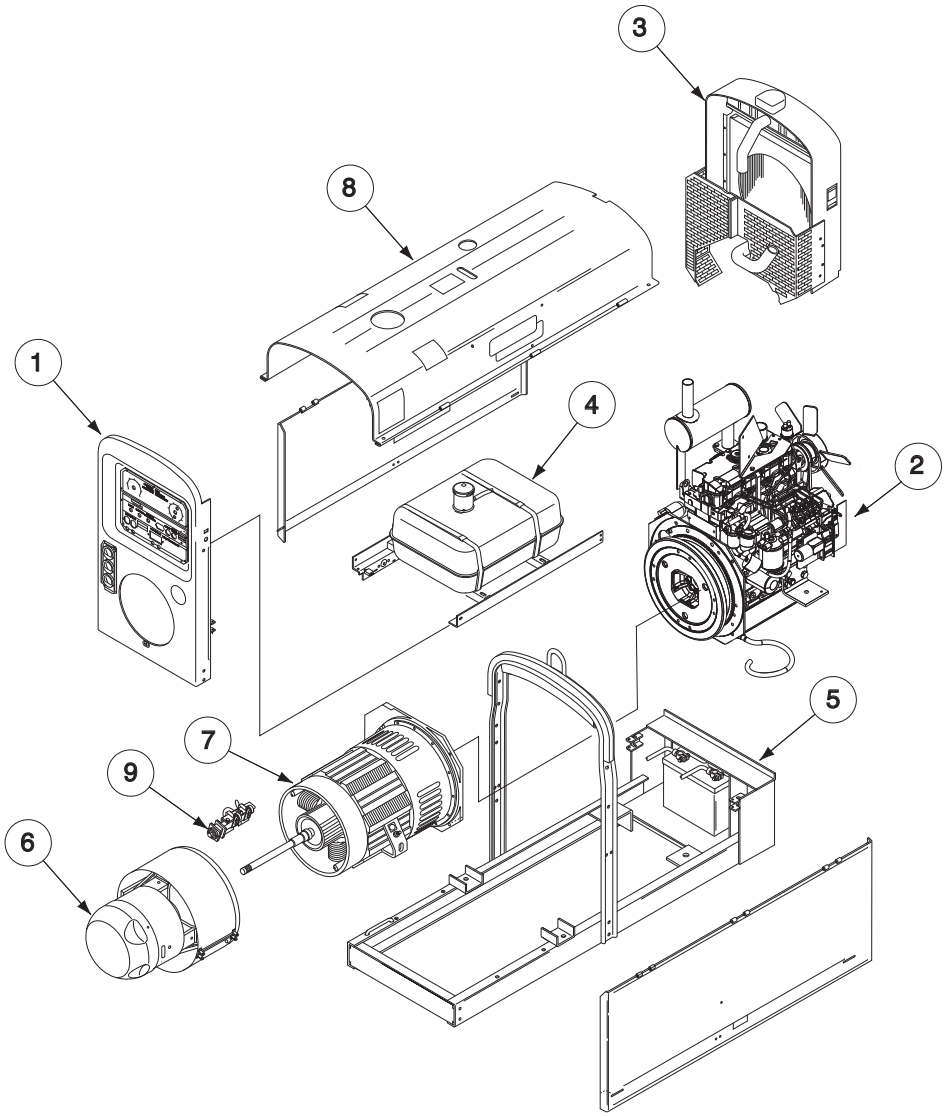

Return to Section TOC
Return to Master TOC

NOTES

Return to Section TOC
Return to Master TOC
Return to Section TOC
Return to Master TOC
Return to Section TOC
Return to Master TOC

TABLE OF CONTENTS - INSTALLATION SECTION

Installation A3

Technical Specifications A3.2

General Description A3.3

Pre-Operation Installation A3.4

Trailer A3.5

Vehicle Mounting A3.5

Polarity Control & Cable Sizes A3.5

Battery Charging A3.6

Return to Master TOC
Return to Master TOC
Return to Master TOC

Return to Section TOC
Return to Master TOC

TECHNICAL SPECIFICATIONS - CLASSIC® 300D KUBOTA

INPUT - DIESEL ENGINE					
Make/Model	**Description**	**Speed (RPM)**	**Displacement**	**Starting System**	**Capacities**
Kubota V2203M	4 Cylinder 4 Cycle Naturally Aspirated Water-Cooled Diesel Engine Cast Iron Cylinder, Block/Crankcase	High Idle 1800 Low Idle 1400 Full Load 1800	134.1 cu. in (2.2 ltrs) **Bore x Stroke** 3.43" x 3.64" 32.5HP @1800 RPM	12VDC battery (Group 24, 650 cold crank amps) 1.4 KW Starter 40 A. Alternator w/ built in reg.	Fuel: 15 gal. 57 L Oil: 8.0 Qts. 7.6 L Coolant: 9.5 Qts. 9.0 L

RATED OUTPUT @ 104°F(40°C) - WELDER			
DESCRIPTION	**RATED DC OUTPUT* VOLTS @ RATED AMPS**	**Duty CYCLE**	**DC CURRENT RANGE** Fine Adjustments in each Range
300 Amp DC Welder All Copper Windings Pure DC Power Generator	30V @ 250A 32V @ 300A 99V DC Max. OCV @ 1800RPM	100% 60%	40-350 Amps 220-Max. 160-240 120-190 80-130 Min.-90

RATED OUTPUT @ 104°F(40°C) - GENERATOR
Auxiliary Power (1)
3,000 Watts Continuous, 60 Hz AC 26 Amps @ 115V 13 Amps @ 230V

PHYSICAL DIMENSIONS (2)				
MODEL	**HEIGHT**	**WIDTH**	**DEPTH**	**WEIGHT**
K1643-5 CSA@ With Out Wire Feed Module	45.5 in. (1156 mm)	24.00 in. (610 mm)	66.36 in. (1686 mm)	1320 lbs. (599 kg)
K1643-6 CSA @ With Wire Feed Module				1355 lbs. (615 kg)

* Based on a 10 min. period.

(1) Output rating in watts is equivalent to volt-amperes at unity power factor. Output voltage is within ± 10% at all loads up to rated capacity. When welding, available auxiliary power will be reduced.

(2) Height to top of exhaust elbow.

Return to Section TOC
Return to Master TOC

GENERAL DESCRIPTION

The CLASSIC® 300D KUBOTA is a heavy duty, engine driven, DC arc welding power source, capable of providing constant current output for stick welding or DC TIG welding. This welder is wound with all copper coils, rated at 300 amps/32 Volts, and provides other Classic® features such as improved door latches and stainless hinges. With the addition of the optional K623-1 Wire Feed Module™, the CLASSIC® 300D KUBOTA will provide constant voltage output for running the LN-7, LN-23P, or LN-25 wire feeders. (The Wire Feed Module is factory installed on the K1643-6). The optional K924-5 Remote Control Kit, provides a remote control rheostat for remote fine current and open circuit voltage adjustment. ***See Section C*** for description.

The CLASSIC® 300D KUBOTA has an Electronic Engine Protection System. In the event of sudden low oil pressure or high coolant temperature, the engine immediately shuts down. The CLASSIC® 300D KUBOTA has a current range of 40-350 DC amps with output ratings as follows:

RATED OUTPUT	DUTY CYCLE
250A @ 30V	100%
300A @ 32V	60%

These units are also capable of providing 3 kVA of 115/230 volts of 60 cycle AC auxiliary power.

The CLASSIC® 300D KUBOTA uses the Kubota V2203M industrial water-cooled diesel engine.

DESIGN FEATURES

Control Panel

Both the engine and the welder controls are located on one recessed panel at the exciter end of the machine. The welder controls consist of a five step “Current Range Selector” switch and a “Fine Current Adjustment” rheostat. The welder is equipped with a “Start” button, an “Ignition” switch, an “Idler” control switch, and a “Glow Plug” button for easier cold weather starting.

The control panel also contains an engine temperature gauge, a battery charging ammeter, an oil pressure gauge, two three prong grounding type receptacles and circuit breakers for auxiliary power.

All Copper Windings - For long life and dependable operation.

Engine Idler - The Classic® 300D is equipped with an electronic automatic engine idler. It automatically increases and decreases engine speed **when starting and stopping welding or using auxiliary power**. A built-in time delay permits changing electrodes before the engine slows to its low idle speed. The “Idler” control switch on the panel locks the idler in high idle position when desired.

Auxiliary Power - 3.0 kVA of nominal 115/230V, 60Hz, AC. Output voltage is maintained within ± 10% at all loads up to rated capacity. (See ***Optional Features in Section C*** for Power Plug Kit.)

Welder Enclosure - The complete welder is rubber mounted on a rugged steel “C” channel base.

The output terminals are placed at the side of the machines so that they are protected by the door. The output terminals are labeled (+) and (-).

Cranking System - A 12 volt electric starter is standard.

Air Cleaner - Heavy duty two stage dry type.

Muffler - A muffler and stainless steel exhaust outlet elbow are standard.

Engine Hour Meter - A meter to record hours of operation.

Engine Protection - The system shuts the engine down in the event of sudden low oil pressure or high coolant temperature. A warning light on the control panel will indicate such a fault. To reset the engine for restarting, turn the ignition switch off then on.
Refer to ***Troubleshooting section*** for all warning light fault codes.

High Idle RPM (OCV) Adjustment - A Potentiometer is mounted on the Control Panel that allows the operator to adjust the high idle engine speed between 1650 and 1800 RPM’S. This is to allow further adjustment of the OCV. Total OCV adjustment range is about 15 volts.

Oil Drain Valve - A ball valve, hose and clamp are standard.

Remote Control - The Remote/Local switch and Receptacle are standard.

GFCI Receptacle - One UL approved 115V ground fault circuit interupter duplex type receptacle is standard on codes 11243 and above. See ***MAINTENANCE*** section for detailed information on testing and resetting the GFCI receptacle.

PRE-OPERATION INSTALLATION

⚠ WARNING

Do not attempt to use this equipment until you have thoroughly read the engine manufacturer's manual supplied with your welder. It includes important safety precautions, detailed engine starting, operating and maintenance instructions, and parts lists.

ELECTRIC SHOCK can kill.
• Do not touch electrically live parts or electrode with skin or wet clothing.
• Insulate yourself from work and ground
• Always wear dry insulating gloves.

ENGINE EXHAUST can kill.
• Use in open, well ventilated areas or vent exhaust outside.

MOVING PARTS can injure.
• Do not operate with doors open or guards off.
• Stop engine before servicing.
• Keep away from moving parts.

See additional warning information at the front of this operator's manual.

EXHAUST SPARK ARRESTER

Some federal, state or local laws may require that engines be equipped with exhaust spark arresters when they are operated in certain locations where unarrested sparks may present a fire hazard. The standard muffler included with this welder does not qualify as a spark arrester. When required by local regulations, a suitable spark arrester must be installed and properly maintained.

⚠ CAUTION

Use of an incorrect arrester may lead to engine damage or performance loss. Contact the engine manufacturer for specific recommendations.

LOCATION/VENTILATION

Always operate the welder with the doors closed. Leaving the doors open changes the designed air flow and may cause overheating.

The welder should be located to provide an unrestricted flow of clean, cool air. Also, locate the welder so that engine exhaust fumes are properly vented to an outside area.

ANGLE OF OPERATION

Engines are designed to run in the level condition which is where the optimum performance is achieved. The maximum angle of continuous operation is 20 degrees in all directions, 30 degrees Intermittent (less than 10 minutes continuous) in all directions.

⚠ CAUTION

DO NOT MOUNT OVER COMBUSTIBLE SURFACES. Where there is a combustible surface directly under stationary or fixed electrical equipment, the surface shall be covered with a steel plate at least .06"(1.6mm) thick, which shall extend not more than 5.90"(150mm) beyond the equipment on all side.

If the engine is to be operated at an angle, provisions must be made for checking and maintaining the oil level at the normal (FULL) oil capacity in the crankcase.

When operating the welder at an angle, the effective fuel capacity will be slightly less than the amount specified.

MACHINE GROUNDING

According to the United States National Electrical Code, the frame of this portable generator is not required to be grounded and is permitted to serve as the grounding means for cord connected equipment plugged into its receptacle.

Some state, local, or other codes or unusual operating circumstances may require the machine frame to be grounded. It is recommended that you determine the extent to which such requirements may apply to your particular situation and follow them explicitly. A machine grounding stud marked with the symbol ⏚ is provided on the welding generator frame foot. In general, if the machine is to be grounded, it should be connected with a #8 or larger copper wire to a solid earth ground such as a metal water pipe going into the ground for at least ten feet and having no insulated joints, or to the metal framework of a building which has been effectively grounded. The U.S. National Code lists a number of alternate means of grounding electrical equipment.

LIFT BAIL

A lift bail is provided for lifting with a hoist.

⚠ WARNING

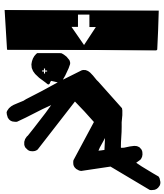

FALLING EQUIPMENT can cause injury.

• Lift only with equipment of adequate lifting capacity.
• Be sure machine is stable when lifting.
• Do not lift this machine using lift bale if it is equipped with a heavy accessory such as trailer or gas cylinder.
• Do not lift machine if lift bale is damaged.
• Do not operate machine while suspended from lift bale.

Return to Section TOC
Return to Master TOC

Return to Section TOC
Return to Master TOC

TRAILER (See *Optional Features*)

If the user adapts a non-Lincoln trailer, the user must assume responsibility that the method of attachment and usage does not result in a safety hazard nor damage the welding equipment. Some of the factors to be considered are as follows:

1. Design capacity of trailer vs. weight of Lincoln equipment and likely additional attachments.
2. Proper support of, and attachment to, the base of the welding equipment so there will be no undue stress to the framework.
3. Proper placement of the equipment on the trailer to ensure stability side to side and front to back when being moved and when standing by itself while being operated or serviced.
4. Typical conditions of use, i.e., travel speed, roughness of surface on which the trailer will be operated; environmental conditions, likely maintenance.
5. Conformance with federal, state and local laws. (1)

(1) Consult your federal, state and local laws regarding specific requirements for use on public highways.

VEHICLE MOUNTING

⚠ WARNING

Improperly mounted concentrated loads may cause unstable vehicle handling and tires or other components to fail.

- **Only transport this Equipment on serviceable vehicles which are rated and designed for such loads.**
- **Distribute, balance and secure loads so vehicle is stable under conditions of use.**
- **Do not exceed maximum rated loads for components such as suspension, axles and tires.**
- **Mount equipment base to metal bed or frame of vehicle.**
- **Follow vehicle manufacture's instructions.**

POLARITY CONTROL AND CABLE SIZES

With the engine off, route the electrode and work cables through the strain relief bracket on the base and connect to the studs located below the fuel tank mounting rail. (See size recommendations below.) For **positive** polarity, connect the electrode cable to the terminal marked **"+"**. For **Negative** polarity, connect the electrode cable to the **"-"** stud. These connections should be checked periodically and tightened if necessary.

When welding at a considerable distance from the welder, be sure you use ample sized welding cables.

RECOMMENDED COPPER CABLE SIZES			
		Cables Sizes for Combined Length of Electrode Plus Work Cable	
Amps	Duty Cycle	Up to 200ft.(61m)	200 to 250ft. (61 to 76m)
250	100%	1	1/0
300	60%	1/0	2/0

PRE-OPERATION SERVICE

⚠ CAUTION

READ the engine operating and maintenance instructions supplied with this machine.

⚠ WARNING

DIESEL FUEL can cause fire

- **Stop engine while fueling.**
- **Do not smoke when fueling.**
- **Keep sparks and flame away from tank.**
- **Do not leave unattended while fueling.**
- **Wipe up spilled fuel and allow fumes to clear before starting engine.**
- **Do not overfill tank, fuel expansion may cause overflow.**

DIESEL FUEL ONLY

OIL

This unit is supplied from the factory with the engine crankcase filled with a high quality SAE 10W/30 oil. This oil should be acceptable for most typical ambient temperatures. Consult the engine operation manual for specific engine manufacturer's recommendations. Upon receipt of the welder, check the engine dipstick to be sure the oil is at the "full" mark. DO NOT overfill.

FUEL

Fill the fuel tank with the grade of fuel recommended in the Engine Operator's manual. Make sure the valve on the water separator is in the open position.

COOLING SYSTEM

The radiator has been filled at the factory with a 50-50 mixture of ethylene glycol antifreeze and water. Check the radiator level and add a 50-50 solution as needed (see engine manual or antifreeze container for alternate antifreeze recommendations).

Battery Charging

⚠ WARNING

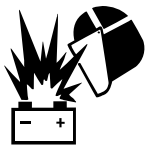

GASES FROM BATTERY can explode.
• Keep sparks, flame and cigarettes away.

BATTERY ACID can burn eyes and skin.
• Wear gloves and eye protection and be careful when boosting, charging or working near battery.

To prevent EXPLOSION when:

a) Installing a new battery - disconnect the negative cable from the old battery first and connect the negative cable to the new battery last.
b) Connecting a battery charger - remove the battery from the welder by disconnecting the negative cable first, then the positive cable and battery clamp. When reinstalling, connect the negative cable last.
c) Using a booster - connect the positive lead to the battery first, then connect the negative lead to the ground lead on the base.

To prevent ELECTRICAL DAMAGE when:

a) Installing a new battery.
b) Using a booster.

Use correct polarity - **Negative Ground**.

- To prevent BATTERY DISCHARGE, if you have an ignition switch, turn it off when engine is not running.

- To prevent BATTERY BUCKLING, tighten nuts on battery clamp until snug.

The CLASSIC® 300D KUBOTA is equipped with a wet charged battery. The charging current is automatically regulated when the battery is low (after starting the engine) to a trickle current when the battery is fully charged.

When replacing, jumping or otherwise connecting the battery to the battery cables, the proper polarity must be observed. This system is **NEGATIVE GROUND**.

Return to Section TOC
Return to Master TOC

TABLE OF CONTENTS - OPERATION SECTION

Operation B3

Engine Operation B3.2

Cold Weather Starting B3.2

Welder Operation B3.3

Idler Operation B3.4

Return to Master TOC
Return to Master TOC
Return to Master TOC
Return to Master TOC

Return to Section TOC
Return to Master TOC

ENGINE OPERATION

⚠ WARNING

Do not attempt to use this equipment until you have thoroughly read the engine manufacturer's manual supplied with your welder. It includes important safety precautions, detailed engine starting, operating and maintenance instructions, and parts lists.

ELECTRIC SHOCK can kill.
• Do not touch electrically live parts or electrode with skin or wet clothing.
• Insulate yourself from work and ground
• Always wear dry insulating gloves.

ENGINE EXHAUST can kill.
• Use in open, well ventilated areas or vent exhaust outside.

MOVING PARTS can injure.
• Do not operate with doors open or guards off.
• Stop engine before servicing.
• Keep away from moving parts.

See additional warning information at the front of this operator's manual.

Operate the welder with the doors closed. Leaving the doors open changes the designed air flow and can cause overheating.

STARTING THE CLASSIC® 300D KUBOTA V2203M DIESEL ENGINE

1. Turn the "IDLER" switch to "HIGH".
2. Turn the "IGNITION" switch to "ON".
3. Press the Glow Plug button for 20 to 30 seconds. (maximum 60 seconds).
4. Press the Glow Plug button and the Start button at the same time. When the engine starts running, release both buttons. If the engine fails to start in 20 seconds, wait 30 seconds and repeat the above procedure.
5. Observe the oil pressure. If no pressure shows within 30 seconds, stop the engine and consult the engine operating manual. To stop the engine, turn the "IGNITION" switch to "OFF".
6. If the engine protection warning light comes on during cranking or after start up, the "IGNITION" switch must be turned "OFF" to reset the engine protection system.
7. Allow the engine to run at high idle speed for several minutes to warm the engine. Stop the engine and recheck the oil level, after allowing sufficient time for the oil to drain into the pan. If the level is down, fill it to the full mark again. The engine controls were properly set at the factory and should require no adjusting when received.

COLD WEATHER STARTING:

With a fully charged battery and the proper weight oil, the engine should start satisfactorily even down to about -5°F (-20°C), it maybe desirable to install cold-starting aides.

Note: Extreme cold weather staring may require longer glow plug operation.

⚠ WARNING

Under NO conditions should ether or other starting fluids be used!

HIGH ALTITUDE OPERATION:

At higher altitudes, output derating may be necessary. For maximum rating, derate the welder 4% for every 300 meters (984 ft.) above 1500 meters (4920 ft.).

Contact a Kubota Service Representative for any engine adjustments that may be required.

STOPPING THE ENGINE

1. Turn the "IGNITION" switch to "OFF"

At the end of each day's welding, check the crankcase oil level, drain accumulated dirt and water from the water separator and refill the fuel tank to minimize moisture condensation in the tank. Also, running out of fuel tends to draw dirt into the fuel system.

When hauling the welder between job sites, close the valve on the water separator.

If the fuel supply is cut off or runs out while the fuel pump is operating, air may be entrapped in the fuel distribution system. If this happens, bleeding of the fuel system may be necessary. Use qualified personnel to do this per the instructions in the ***MAINTENANCE*** section of this manual.

ENGINE BREAK-IN

Lincoln Electric selects high quality, heavy-duty industrial engines for the portable welding machines we offer. While it is normal to see a small amount of crankcase oil consumption during initial operation, excessive oil use, wet stacking (oil or tar like substance at the exhaust port), or excessive smoke is not normal.

Larger machines with a capacity of 350 amperes and higher, which are operated at low or no-load conditions for extended periods of time are especially susceptible to the conditions described above. To accomplish successful engine break-in, most diesel-powered equipment needs only to be run at a reasonably heavy load within the rating of the welder for some period of time during the engine's early life. However, if the welder is subjected to extensive light loading, occasional moderate to heavy loading of the engine may sometimes be necessary. Caution must be observed in correctly loading a diesel/generator unit.

1. Connect the welder output studs to a suitable resistive load bank. Note that any attempt to short the output studs by connecting the welding leads together, direct shorting of the output studs, or connecting the output leads to a length of steel will result in catastrophic damage to the generator and voids the warranty.
2. Set the welder controls for an output current and voltage within the welder rating and duty cycle. Note that any attempt to exceed the welder rating or duty cycle for any period of time will result in catastrophic damage to the generator and voids the warranty.
3. Periodically shut off the engine and check the crankcase oil level.

WELDER OPERATION

⚠ WARNING

ELECTRIC SHOCK can kill.
- **Do not touch electrically live parts or electrode with skin or wet clothing.**
- **Insulate yourself from work and ground.**

FUMES & GASES can be dangerous.
- **Keep your head out of the fumes.**
- **Use ventilation or exhaust to remove fumes from breathing zone.**

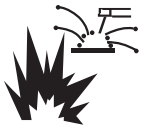

WELDING SPARKS can cause fire or explosion.
- **Keep flammable material away.**

ARC RAYS can burn.
- **Wear eye, ear, and body protection.**

DUTY CYCLE

The NEMA output rating of the CLASSIC® 300D KUBOTA is 300 amperes at 32 arc volts on a 60% duty cycle (consult Specifications in this manual for alternate ratings). Duty cycle is based on a ten minute period; thus, the welder can be loaded at rated output for six minutes out of every ten minute period.

CONTROL OF WELDING CURRENT

⚠ CAUTION

DO NOT TURN THE "CURRENT RANGE SELECTOR" WHILE WELDING because the current may arc between the contacts and damage the switch.

The "Current Range Selector" provides five overlapping current ranges. The "Fine Current Adjustment" adjusts the current from minimum to maximum within each range. Open circuit voltage is also controlled by the "Fine Current Adjustment" permitting control of the arc characteristics.

A high open circuit voltage setting provides the soft "buttering" arc with best resistance to pop-outs preferred for most welding. To get this characteristic, set the "Current Range Selector" to the lowest setting that still provides the current you need and set the "Fine Current Adjustment" near maximum. For example: to obtain 175 amps and a soft arc, set the "Current Range Selector" to the 190-120 position and then adjust the "Fine Current Adjustment" for 175 amps.

When a forceful "digging" arc is required, usually for vertical and overhead welding, use a higher "Current Range Selector" setting and lower open circuit voltage. For example: to obtain 175 amps and a forceful arc, set the "Current Range Selector" to the 240-160 position and the "Fine Current Adjustment" setting to get 175 amps.

Some arc instability may be experienced with EXX10 electrodes when trying to operate with long arc techniques at settings at the lower end of the open circuit voltage range.

⚠ CAUTION

DO NOT attempt to set the "Current Range Selector" between the five points designated on the nameplate.

These switches have a spring loaded cam which almost eliminates the possibility of setting this switch between the designated points.

Return to Section TOC
Return to Master TOC

Return to Section TOC
Return to Master TOC

IDLER OPERATION

Start the engine with the "Idler" switch in the "High" position. Allow it to run at high idle speed for several minutes to warm the engine. See ***Specifications*** for operating speeds.

The idler is controlled by the "Idler" toggle switch on the welder control panel. The switch has two positions as follows:

1. In the "High" position, the engine control unit increases the engine to high idle speed.
2. In the "Auto" / position, the idler operates as follows:
   a. When welding or drawing power for lights or tools (approximately 100 watts minimum) from the receptacles, the engine operates at high idle speed.
   b. When welding ceases or the power load is turned off, a preset time delay of about 15 seconds starts. This time delay cannot be adjusted.
   c. If the welding or power load is not re-started before the end of the time delay, the engine control unit reduces the engine to low idle speed.

AUXILIARY POWER

Start the engine and set the "IDLER" control switch to the "High Idle" mode. Voltage is now correct at the receptacles for auxiliary power. This must be done before a tripped GFCI receptacle can be reset properly. See the ***MAINTENANCE*** section for detailed information on testing and resetting the GFCI receptacle.

The AC auxiliary power, supplied as a standard, has a rating of 3.0 kVA of 115/230 VAC (60 hertz).

With the 3.0 kVA, 115/230 VAC auxiliary power, one 115V duplex and one 230V duplex, grounding type receptacle are provided. The circuit is protected with circuit breakers.

The rating of 3.0 kVA permits a maximum continuous current of 13 amps to be drawn from the 230 volt duplex receptacle. Or a total of 26 amps can be drawn from the 115 volt duplex receptacle. The 115 volt duplex receptacle has a configuration which permits 20 amps to be drawn from either half. The total combined load of all receptacles is not to exceed 3.0 kVA.

An optional power plug kit is available. When this kit is specified, the customer is supplied with a plug for each receptacle.

When the High Speed Adjustment knob is in the MIN position, the frequency of the AC auxiliary output may be reduced to approximately 55 Hertz. It is recommended that the High Idle Speed Adjustment knob should be in the MAX position when using the AC auxiliary output.

CLASSIC® 300D WITH KUBOTA V2203M DIESEL ENGINE TYPICAL FUEL CONSUMPTION DATA

Low Idle (1400 RPM)-No Load	0.30 gal/hr (1.14 ltrs/hr)
High Idle (1800 RPM)-No Load	0.46 gal/hr (1.74 ltrs/hr)
3,000 Watts	0.61 gal/hr (2.31 ltrs/hr)
250 Amps @ 30 Volts	1.01 gal/hr (3.82 ltrs/hr)
300 Amps @ 32 Volts	1.32 gal/hr (5.00 ltrs/hr)

TABLE OF CONTENTS - ACCESSORIES SECTION

Accessories C3

Options C3.1

Wire Feed Options C3.3

Return to Master TOC
Return to Master TOC
Return to Master TOC
Return to Master TOC

Return to Section TOC
Return to Master TOC

OPTIONAL FEATURES (Field Installed)

GENERAL OPTIONS

⚠ WARNING

Pipe Thawing with an arc welder can cause fire, explosion, damage to electric wiring or to the arc welder if done improperly. The use of an arc welder for pipe thawing is not approved by the CSA, nor is it recommended or supported by Lincoln Electric.

Power Plug Kit (K802D) - A power plug kit for the auxiliary power receptacles is available. (Provides a plug for each receptacle.)

GFCI Receptacle Kit (K1690-1) - Includes one UL approved 115V ground fault circuit interrupter duplex type receptacle with cover and installation instructions. Replaces the factory installed 115V duplex receptacle. Each receptacle of the GFCI duplex is rated at 20 amps. Maximum total current from the GFCI duplex is limited to 20 amps. (For Codes 11112, 11113). See ***MAINTENANCE*** section for detailed information on testing and resetting the GFCI receptacle.

Spark Arrestor Kit (K903-1) - Includes a heavy gage steel, approved spark arrestor, clamp and adapter for mounting to the muffler exhaust pipe.

TRAILER (K953-1) - Two-wheeled trailer with optional fender and light package. For highway use, consult applicable federal, state, and local laws regarding possible additional requirements. There is a choice of 2 hitches, a fender & a light package.

K953-1 Trailer
K958-1 Ball Hitch
K958-2 Lunette Eye Hitch
K959-1 Fender & Light Kit
K965-1 Cable Rack

Service Indicator Kit K1858-1 - Provides a GO / NO-GO visual indication of air cleaner element useful service life. Filter service based on restriction readings allows the longest life possible from the filter and best engine protection.

STICK OPTIONS

K704 ACCESSORY SET - Includes 35 feet (10 m) of electrode cable and 30 feet (9 m) of work cable, headshield, work clamp and electrode holder. Cable is rated at 500 amps, 60% duty cycle.

Remote Control Kit (K924-5) - Contains remote control rheostat and 100 ft. (30.5 m) cable for adjusting the OCV at the welding site. (For Codes 10911 and above.)

Remote Control Kit (K2464-1) - Contains remote control rheostat (for adjusting the CC "STICK" OCV), and 100ft.(30.5m) cable. (See **Wiring/Connection Diagram Section G**)

TIG OPTIONS

TIG Module (K930-2) - Provides high frequency and shielding gas control for AC and DC GTAW (TIG) welding applications. Its compact case is designed for easy carrying, complete with a handle. High frequency bypass is built in. The K936-4 control cable is required.

PTA-26V TIG Torch (K1783-9) - Air cooled 200 amp-torch equipped with valve for gas flow control. 25Ft. length.

Magnum Parts Kit For PTA-26V TIG TorchKP509

Control Cable (K936-4) (required for TIG Module) - Control Cable for connecting the K930-2 Tig Module.

Arc Start Switch (K814) (required for TIG Module) - Comes with a 25ft.(7.6m) cable. Attaches to the TIG torch for convenient finger control.

Contactor Kit (K938-1) (required for TIG Module) - Provide "Cold" tungsten Tip when welding with the TIG Module.

Control Cable Extension (K937-45) - Allows the TIG Module to be operated at distances up to 200 ft. from the power source.Available in 45 ft. (13.7m).

Water Valve Kit (K844-1)- For use with a water-cooled TIG torch. Installs inside TIG Module.

WIRE FEED OPTIONS

Wire Feed Module (K623-1) - Provides constant voltage (CV) output with improved arc stability for Innershield welding. Excellent for MIG welding. Recommended wire feeders are the LN-7, LN-23P and LN-25. (Factory installed on the K1643-6).

LN-25 Wire Feeder (K449)-Portable CC/CV unit for flux-cored and MIG welding. Includes Gas Solenoid & Internal Contactor. Requires Wire Feed Module.

Remote Voltage Control Kit for LN-25 (K444-2) Provides 25 ft. (7.5m) of remote output voltage control and output jumper (2 and 4) for machines having 14 pin MS-type connector.

Magnum® 350 Innershield Gun (for LN-25)(K126-2)- For self-shielded wire with 15 ft. (4.5m) cable. For .062-3/32" (1.6-2.8mm) wire.

Magnum® 300 MIG Gun for LN-25 K1802-1 - With 15 ft. (4.5m) cable. For .035"-.045" (0.9-1.2mm) gas shielded (Includes Connector Kit).

LN-23P Wire Feeder (K316L-1)-Portable CV unit for Innershield pipe welding. Control cable operates contactor inside Wire Feed Module for "cold" electrode. Requires LN-23P Adapter Kit (K350-1) and Gun and Cable Assembly.

LN-23P Adapter Kit (K350-1)-Required to adapt LN-23P to any Lincoln power source. Makes 14 pin connection at power source.

Magnum® 250 Innershield Gun (for LN-23P) (K355-10)- For lighter weight and easier handling. Rated 250 amps, 60% duty cycle. For .068 through 5/64" (1.7 through 2.0 mm) Innershield wire and includes reduced speed switch. For pipe welding, an M11476 62° gun tube is recommended.

62° gun tube for PipeWelding (KP1909-1)- Recommended modification for K355-X or K345-X guns with 90° gun tubes. Compatible with K126-1,-2 K264-8 and K355-10.

Magnum Spool Gun (K487-25)-Hand held semiautomatic wire feeder requires SG Control Module. 25 ft. (7.6m)length.

SG Control Module (K488) (For Magnum Spool Gun) -The interface between the power source and the spool gun. Provides control of wire speed and gas flow.

Input Cable (K691-10) (For SG Control Module) - For Lincoln engine drives with 14-pin MS-type connection provides separate 115V NEMA receptacle and output stud connections. 10 ft. (3.1m)length.

Return to Section TOC
Return to Master TOC

NOTES

Return to Section TOC
Return to Master TOC
Return to Section TOC
Return to Master TOC
Return to Section TOC
Return to Master TOC

TABLE OF CONTENTS - MAINTENANCE SECTION

Maintenance D3

Maintenance D3.2

Idler Maintenance D3.3

Engine Service D3.4

GFCI Receptacle Testing & Resetting D3.5

Major Component Location D3.6

Return to Master TOC

Return to Master TOC

Return to Master TOC

Return to Master TOC

MAINTENANCE

⚠ WARNING

Have qualified personnel do the maintenance work. Turn the engine off before working inside the machine. In some cases, it may be necessary to remove safety guards to perform required maintenance. Remove guards only when necessary and replace them when the maintenance requiring their removal is complete. Always use the greatest care when working near moving parts.

Do not put your hands near the engine cooling blower fan. If a problem cannot be corrected by following the instructions, take the machine to the nearest Lincoln Field Service Shop.

ELECTRIC SHOCK can kill.
- **Do not touch electrically live parts or electrode with skin or wet clothing.**
- **Insulate yourself from work and ground**
- **Always wear dry insulating gloves.**

ENGINE EXHAUST can kill.
- **Use in open, well ventilated areas or vent exhaust outside.**

MOVING PARTS can injure.
- **Do not operate with doors open or guards off.**
- **Stop engine before servicing.**
- **Keep away from moving parts.**

See additional warning information at front of this operator's manual.

GENERAL INSTRUCTIONS

1. Blow out the welder and controls with an air hose at least once every two months. In particularly dirty locations, this cleaning may be necessary once a week. Use low pressure air to avoid driving dirt into the insulation.

2. "Current Range Selector" contacts should not be greased. To keep the contacts clean, rotate the current control through its entire range frequently. Good practice is to turn the handle from maximum to minimum setting twice each morning before starting to weld.

3. Put a drop of oil on the "Current Range Selector" shaft at least once every month.

4. Follow the engine service schedule in this manual and the detailed maintenance and troubleshooting in the engine manufacturer's manual.

COOLING SYSTEM

The CLASSIC® 300D KUBOTA is equipped with a pressure radiator. Keep the radiator cap tight to prevent loss of coolant. Clean and flush the cooling system periodically to prevent clogging the passage and overheating the engine. When antifreeze is needed, always use the permanent type.

BEARINGS

This welder is equipped with a double-shielded ball bearing having sufficient grease to last indefinitely under normal service. Where the welder is used constantly or in excessively dirty locations, it may be necessary to add one half ounce of grease per year. A pad of grease one inch wide, one inch long, and one inch high weighs approximately one half ounce. Overgreasing is far worse than insufficient greasing.

When greasing the bearings, keep all dirt out of the area. Wipe the fittings completely clean and use clean equipment. More bearing failures are caused by dirt introduced during greasing than from insufficient grease.

COMMUTATOR AND BRUSHES

⚠ WARNING

Uncovered rotating equipment can be dangerous. Use care so your hands, hair, clothing or tools do not catch in the rotating parts. Protect yourself from particles that may be thrown out by the rotating armature when stoning the commutator.

Shifting of the commutator brushes may result in:
- Change in machine output
- Commutator damage
- Excessive brush wear

Periodically inspect the commutator, slip rings, and brushes by removing the covers. DO NOT remove or replace these covers while the machine is running. Commutators and slip rings require little attention. However, if they are black or appear uneven, have them cleaned by an experienced maintenance man using fine sandpaper or a commutator stone. Never use emery cloth or paper for this purpose.

Return to Section TOC
Return to Master TOC

Replace brushes when they wear within 1/4”(3.5mm) of the pigtail. A complete set of replacement brushes should be kept on hand. Lincoln brushes have a curved face to fit the commutator. Have an experienced maintenance man seat these brushes by lightly stoning the commutator as the armature rotates at full speed until contact is made across the full face of the brushes. After stoning, blow out the dust with low pressure air.

To seat slip ring brushes, position the brushes in place. Then slide one end of a piece of fine sandpaper between slip rings and brushes with the coarse side against the brushes. With slight additional finger pressure on top of the brushes, pull the sandpaper around the circumference of the rings - in direction of rotation only - until brushes seat properly. In addition, stone slip ring with a fine stone. Brushes must be seated 100%.

Arcing or excessive exciter brush wear indicates a possible misaligned shaft. Have an authorized Field Service Shop check and realign the shaft.

IDLER MAINTENANCE

⚠ CAUTION

Before doing electrical work, disconnect the battery.

When installing a new battery or using a jumper battery to start the engine, be sure the battery polarity is connected properly. The correct polarity is **negative** ground. Damage to the engine alternator and the Engine Control Unit can result from incorrect connection.

1. Proper operation of the idler requires good grounding of the Engine Control Unit, current sensing printed circuit board and battery.

2. If desired, the welder can be used without automatic idling by setting the “Idler” switch to the “High” position.

NAMEPLATES

Whenever routine maintenance is performed on this machine - or at least yearly - inspect all nameplates and labels for legibility. Replace those which are no longer clear. Refer to the parts list for the replacement item number.

PURGING AIR FROM FUEL SYSTEM (KUBOTA V2203M ENGINE)

⚠ WARNING

Keep fuel clear of open flames or arcs, allow engine to cool before working on the fuel system. Wipe up any spilled fuel and do not start engine until fumes clear.

If the engine is running rough and you suspect air has been trapped in the fuel system, (e.g. the engine was allowed to run out of fuel) perform the following steps using qualified personnel:

1. Fully open the air bleeding valve by turning it counter clockwise, it is located on top of the fuel injection pump next to the oil filler. (see figure D3.3)

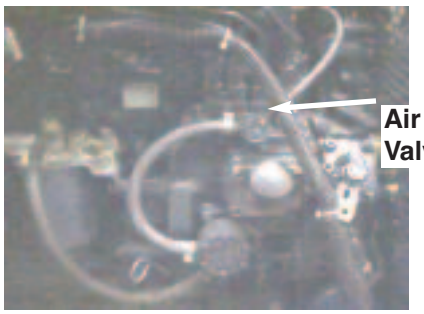

FIGURE D3.3

2. Turn the engine by pressing the start button until the engine runs smoothly (this should take approximately 10 seconds).

3. Fully close the air bleeding valve by turning it clockwise.

Contact your Kubota Engine repair facility if problems persist.

Return to Section TOC
Return to Master TOC

Return to Section TOC
Return to Master TOC

ENGINE SERVICE

EVERY DAY OR EVERY 8 HOURS	FIRST SERVICE (50 HOURS)	EVERY 100 HOURS OR 3 MONTHS	EVERY 150 HOURS OR 4 MONTHS	EVERY 30O HOURS OR 9 MONTHS	EVERY 400 HOURS OR 12 MONTHS	EVERY 500 HOURS OR 15 MONTHS	EVERY 600 HOURS OR 18 MONTHS	ENGINE SERVICE (NOTE 2)	
								MAINTENANCE ITEM	TYPE OR QUANTITY
I								Coolant level	
					I			Concentration of antifreeze	50/50 Water/Ethylene Glycol
							R	Coolant (NOTE 3)	9.5 qrts., 9.0L
I								Engine oil level (NOTE 1)	
	R		R					Engine oil (NOTE 1 & 3)	8.0 qrts., 7.6L (including filter)
	R			R				Engine oil filter	Kubota #16414-32430
		C						Drain water separator & fuel strainer	
					R			Fuel filter canister	Kubota #16631-43560
		C						Fuel pre-filter element	Kubota #15831-43380
		I						Tension of alternator drive belt	
		I						Alternator drive belt wear	
						R		Alternator drive belt	Kubota # 17480-97010
		C						Air filter (earlier check may be req'd)	
					R			Air filter element	Donaldson # P821575
							I	Valve clearances	Intake .0071"-.0086", Exhaust .0071"-.0086"
							I	Electrical systems	
							I	All nuts and bolts for tightness	
I								Leaks or engine damage	
		I						Battery	

I = Inspect C = Clean R = Replace

Notes:

(1) Consult Engine Operators Manual for oil recommendations.
(2) Consult Engine Operators Manual for additional maintenance schedule information.
(3) Fill slowly! Ensure correct quantity is used.

Above operations to be carried out by trained personnel with reference to the workshop manual where necessary.
These preventive maintenance periods apply to average conditions of operation.
If necessary use shorter periods.

S25833

Return to Section TOC
Return to Master TOC

GFCI RECEPTACLE TESTING AND RESETTING PROCEDURE

The GFCI receptacle should be properly tested at least once every month or whenever it is tripped. To properly test and reset the GFCI receptacle:

- If the receptacle has tripped, first carefully remove any load and check it for damage.
- If the equipment has been shut down, it must be restarted.
- The equipment needs to be operating at high idle speed and any necessary adjustments made on the control panel so that the equipment is providing at least 80 volts to the receptacle input terminals.
- The circuit breaker for this receptacle must not be tripped. Reset if necessary.
- Push the "Reset" button located on the GFCI receptacle. This will assure normal GFCI operation.
- Plug a night-light (with an "ON/OFF" switch) or other product (such as a lamp) into the GFCI receptacle and turn the product "ON".
- Push the "Test" button located on the GFCI receptacle. The night-light or other product should go "OFF".
- Push the "Reset" button, again. The light or other product should go "ON" again.

If the light or other product remains "ON" when the "Test" button is pushed, the GFCI is not working properly or has been incorrectly installed (miswired). If your GFCI is not working properly, contact a qualified, certified electrician who can assess the situation, rewire the GFCI if necessary or replace the device.

1. Case Front Assembly
2. Engine Assembly
3. Radiator Assembly
4. Fuel Tank & Mounting
5. Base & Lift Bale Assembly
6. Exciter and Stator
7. Welding Generator & Coupling (2 of 2)
8. Roof & Doors
9. Generator Brush Holder

FIGURE D3.6 - MAJOR COMPONENT LOCATION

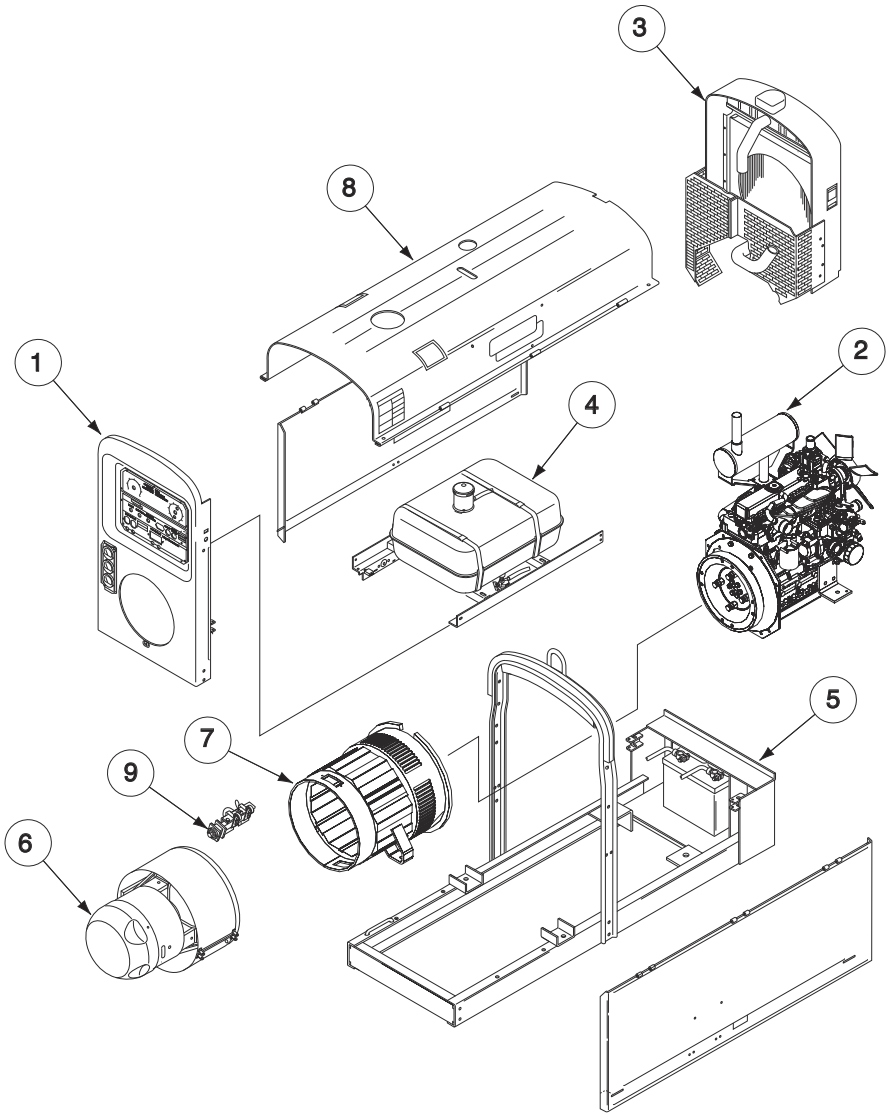

Return to Section TOC
Return to Master TOC

TABLE OF CONTENTS - INSTALLATION SECTION

Installation A-4

Technical Specifications A4.2

General Description A4.3

Pre-Operation Installation A4.4

Vehicle Mounting A4.5

Battery Charging A4.6

Return to Master TOC

Return to Master TOC

Return to Master TOC

Return to Section TOC
Return to Master TOC

TECHNICAL SPECIFICATIONS - CLASSIC® 300D PERKINS

INPUT - DIESEL ENGINE

Make/Model	Description	Speed (RPM)	Displacement	Starting System	Capacities
Perkins 404D-22 EPA Tier 4 interim Compliant	4 Cylinder 4 Cycle Naturally Aspirated Water-Cooled Diesel Engine Cast Iron Cylinder, Block/Crankcase	High Idle 1800 Low Idle 1400 Full Load 1725	135 cu. in (2.2 ltrs) **Bore x Stroke** 3.3" x 3.9" (84mm x 100mm) 32.7HP @1800 RPM	12VDC battery (Group 24, 650 cold crank amps) 2.0 KW Starter 65 A. Alternator w/ built in reg.	Fuel: 15 gal. 57 L. Oil: 10.30 Qts. 9.75 L. Coolant: 9.5 Qts. 9.0 L.

RATED OUTPUT @ 104°F(40°C) - WELDER

DESCRIPTION	RATED DC OUTPUT * VOLTS @ RATED AMPS	Duty CYCLE	DC CURRENT RANGE Fine Adjustments in each Range
300 Amp DC Welder All Copper Windings Pure DC Power Generator	30V @ 250A 32V @ 300A 99V DC Max. OCV @ 1800RPM	100% 60%	40-350 Amps 220-Max. 160-240 120-190 80-130 Min.-90

RATED OUTPUT @ 104°F(40°C) - GENERATOR

Auxiliary Power (1)
3,000 Watts Continuous, 60 Hz AC 26 Amps @ 115V 13 Amps @ 230V

PHYSICAL DIMENSIONS (2)

MODEL	HEIGHT	WIDTH	DEPTH	WEIGHT
K1643-7 CSA w/o Wire Feed Module (Code 11472)	45.5 in. (1156 mm)	24.00 in. (610 mm)	65.0 in. (1651 mm	1354 lbs. (616 kg)
K1643-8 CSA w/ Wire Feed Module (Codes 11473)				1389lbs. (630 kg)

* Based on a 10 min. period.

(1) Output rating in watts is equivalent to volt-amperes at unity power factor. Output voltage is within ± 10% at all loads up to rated capacity. When welding, available auxiliary power will be reduced.

(2) Height to top of exhaust elbow.

Return to Section TOC
Return to Master TOC

GENERAL DESCRIPTION

The Classic® 300D Perkins is a heavy duty, engine driven, DC arc welding power source, capable of providing constant current output for stick welding or DC TIG welding. This welder is wound with all copper coils, rated at 300 amps/32 Volts, and provides other Classic® features such as improved door latches and stainless hinges. With the addition of the optional K623-1 Wire Feed Module™, the Classic® 300D Perkins will provide constant voltage output for running the LN-7, LN-23P, or LN-25 wire feeders. (The Wire Feed Module is factory installed on the K1643-8). The optional K924-5 Remote Control Kit, provides a remote control rheostat for remote fine current and open circuit voltage adjustment. ***See Section C*** for description.

The Classic® 300D Perkins has an Electronic Engine Protection System. In the event of sudden low oil pressure or high coolant temperature, the engine immediately shuts down. The Classic® 300D Perkins has a current range of 40-350 DC amps with output ratings as follows:

These units are also capable of providing 3 KVA of

RATED OUTPUT	DUTY CYCLE
250A @ 30V	100%
300A @ 32V	60%

115/230 volts of 60 cycle AC auxiliary power.

The Classic® 300D Perkins uses the Perkins 404D-22 industrial water-cooled diesel engine.

DESIGN FEATURES

Control Panel

Both the engine and the welder controls are located on one recessed panel at the exciter end of the machine. The welder controls consist of a five step “Current Range Selector” switch and a “Fine Current Adjustment” rheostat. The welder is equipped with a “Start” button, an “Ignition” switch, an “Idler” control switch, and a “Glow Plug” button for easier cold weather starting.

The control panel also contains an engine temperature gauge, a battery charging ammeter, an oil pressure gauge, for auxiliary power one three prong grounding type receptacles, one GFCI receptacle and circuit breakers for protection.

All Copper Windings - For long life and dependable operation.

Engine Idler - The Classic® 300D Perkins is equipped with an electronic automatic engine idler. It automatically increases and decreases engine speed **when starting and stopping welding or using auxiliary power**. A built-in time delay permits changing electrodes before the engine slows to its low idle speed. The “Idler” control switch on the panel locks the idler in high idle position when desired.

Auxiliary Power - 3.0 KVA of nominal 115/230V, 60Hz, AC. Output voltage is maintained within ± 10% at all loads up to rated capacity. (See ***Optional Features Section C*** for Power Plug Kit.)

GFCI Receptacle - One UL approved 115V ground fault circuit interrupter duplex type receptacle is standard. See the ***MAINTENANCE*** section for detailed information on testing and resetting the GFCI receptacle.

Welder Enclosure - The complete welder is rubber mounted on a rugged steel “C” channel base.

The output terminals are placed at the side of the machines so that they are protected by the door. The output terminals are labeled (+) and (-).

Cranking System - A 12 volt electric starter is standard.

Air Cleaner - Heavy duty two stage dry type.

Muffler - A muffler and stainless steel exhaust outlet elbow are standard.

Engine Hour Meter - A meter to record hours of operation.

Engine Protection - The system shuts the engine down in the event of sudden low oil pressure or high coolant temperature. A warning light on the control panel will indicate such a fault. To reset the engine for restarting, turn the ignition switch off then on.

Oil Drain Valve - A ball valve, hose and clamp are standard.

Remote Control - The Remote / Local Switch and Receptacle are standard.

Return to Section TOC
Return to Master TOC

PRE-OPERATION INSTALLATION

⚠ WARNING

Do not attempt to use this equipment until you have thoroughly read the engine manufacturer's manual supplied with your welder. It includes important safety precautions, detailed engine starting, operating and maintenance instructions, and parts lists.

ELECTRIC SHOCK can kill.
- **Do not touch electrically live parts or electrode with skin or wet clothing.**
- **Insulate yourself from work and ground**
- **Always wear dry insulating gloves.**

ENGINE EXHAUST can kill.
- **Use in open, well ventilated areas or vent exhaust outside.**

MOVING PARTS can injure.
- **Do not operate with doors open or guards off.**
- **Stop engine before servicing.**
- **Keep away from moving parts.**

See additional warning information at the front of this operator's manual.

EXHAUST SPARK ARRESTER

Some federal, state or local laws may require that engines be equipped with exhaust spark arresters when they are operated in certain locations where unarrested sparks may present a fire hazard. The standard muffler included with this welder does not qualify as a spark arrester. When required by local regulations, a suitable spark arrester must be installed and properly maintained.

⚠ CAUTION

Use of an incorrect arrester may lead to engine damage or performance loss. Contact the engine manufacturer for specific recommendations.

LOCATION / VENTILATION

Always operate the welder with the doors closed. Leaving the doors open changes the designed air flow and may cause overheating.

The welder should be located to provide an unrestricted flow of clean, cool air. Also, locate the welder so that engine exhaust fumes are properly vented to an outside area.

⚠ CAUTION

DO NOT MOUNT OVER COMBUSTIBLE SURFACES.
Where there is a combustible surface directly under stationary or fixed electrical equipment, the surface shall be covered with a steel plate at least .06"(1.6mm) thick, which shall extend not more than 5.90"(150mm) beyond the equipment on all sides.

MACHINE GROUNDING

According to the United States National Electrical Code, the frame of this portable generator is not required to be grounded and is permitted to serve as the grounding means for cord connected equipment plugged into its receptacle.

Some state, local, or other codes or unusual operating circumstances may require the machine frame to be grounded. It is recommended that you determine the extent to which such requirements may apply to your particular situation and follow them explicitly. A machine grounding stud marked with the symbol ⏚ is provided on the welding generator frame foot. In general, if the machine is to be grounded, it should be connected with a #8 or larger copper wire to a solid earth ground such as a metal water pipe going into the ground for at least ten feet and having no insulated joints, or to the metal framework of a building which has been effectively grounded. The U.S. National Code lists a number of alternate means of grounding electrical equipment.

LIFT BAIL

A lift bail is provided for lifting with a hoist.

⚠ WARNING

- **Lift only with equipment of adequate lifting capacity.**
- **Be sure machine is stable when lifting.**
- **Do not lift this machine using lift bail if it is equipped with a heavy accessory such as trailer or gas cylinder.**

FALLING EQUIPMENT can cause injury.

- **Do not lift machine if lift bail is damaged.**
- **Do not operate machine while suspended from lift bail.**

TRAILER (SEE OPTIONAL FEATURES)

If the user adapts a non-Lincoln trailer, he must assume responsibility that the method of attachment and usage does not result in a safety hazard nor damage the welding equipment. Some of the factors to be considered are as follows:

1. Design capacity of trailer vs. weight of Lincoln equipment and likely additional attachments.

2. Proper support of, and attachment to, the base of the welding equipment so there will be no undue stress to the framework.

3. Proper placement of the equipment on the trailer to ensure stability side to side and front to back when being moved and when standing by itself while being operated or serviced.

4. Typical conditions of use, i.e., travel speed, roughness of surface on which the trailer will be operated; environmental conditions, likely maintenance.

5. Conformance with federal, state and local laws. (1)

(1) Consult your federal, state and local laws regarding specific requirements for use on public highways.

VEHICLE MOUNTING

⚠ WARNING

Improperly mounted concentrated loads may cause unstable vehicle handling and tires or other components to fail.

- **Only transport this Equipment on serviceable vehicles which are rated and designed for such loads.**
- **Distribute, balance and secure loads so vehicle is stable under conditions of use.**
- **Do not exceed maximum rated loads for components such as suspension, axles and tires.**
- **Use appropriate nuts bolts and lockwashers to attach the equipment base to the metal bed or frame of vehicle.**
- **Follow vehicle manufacturer's instructions.**

POLARITY CONTROL AND CABLE SIZES

With the engine off, route the electrode and work cables through the strain relief bracket on the base and connect to the studs located below the fuel tank mounting rail. (See size recommendations below.) For **positive** polarity, connect the electrode cable to the terminal marked **"+"**. For **Negative** polarity, connect the electrode cable to the **"-"** stud. These connections should be checked periodically and tightened if necessary.

When welding at a considerable distance from the welder, be sure you use ample sized welding cables.

RECOMMENDED COPPER CABLE SIZES			
		Cables Sizes for Combined Length of Electrode Plus Work Cable	
Amps	Duty Cycle	Up to 200ft.(61m)	200 to 250ft. (61 to 76m)
250	100%	1	1/0
300	60%	1/0	2/0

PRE-OPERATION SERVICE

⚠ CAUTION

READ the engine operating and maintenance instructions supplied with this machine.

⚠ WARNING

DIESEL FUEL can cause fire

- **Stop engine while fueling.**
- **Do not smoke when fueling.**
- **Keep sparks and flame away from tank.**
- **Do not leave unattended while fueling.**
- **Wipe up spilled fuel and allow fumes to clear before starting engine.**
- **Do not overfill tank, fuel expansion may cause overflow.**

DIESEL FUEL ONLY-Low sulphur fuel or ultra low sulphur fuel in U.S.A. and Canada.

OIL

This unit is supplied from the factory with the engine crankcase filled with a high quality SAE 10W/30 oil. This oil should be acceptable for most typical ambient temperatures. Consult the engine operation manual for specific engine manufacturer's recommendations. Upon receipt of the welder, check the engine dipstick to be sure the oil is at the "full" mark. DO NOT overfill.

FUEL

Fill the fuel tank with the grade of fuel recommended in the Engine Operator's manual. Make sure the fuel valve on the water separator is in the open position.

COOLING SYSTEM

The radiator has been filled at the factory with a 50-50 mixture of ethylene glycol antifreeze and water. Check the radiator level and add a 50-50 solution as needed (see engine manual or antifreeze container for alternate antifreeze recommendations).

Return to Section TOC
Return to Master TOC

BATTERY CHARGING

⚠ WARNING

GASES FROM BATTERY can explode.
- **Keep sparks, flame and cigarettes away.**

BATTERY ACID can burn eyes and skin.
- **Wear gloves and eye protection and be careful when boosting, charging or working near battery.**

To prevent EXPLOSION when:

a) Installing a new battery - disconnect the negative cable from the old battery first and connect the negative cable to the new battery last.

b) Connecting a battery charger - remove the battery from the welder by disconnecting the negative cable first, then the positive cable and battery clamp. When reinstalling, connect the negative cable last.

c) Using a booster - connect the positive lead to the battery first, then connect the negative lead to the ground lead on the base.

To prevent ELECTRICAL DAMAGE when:

a) Installing a new battery.

b) Using a booster.

Use correct polarity - Negative Ground.

To prevent BATTERY DISCHARGE, if you have an ignition switch, turn it off when engine is not running.

- **To prevent BATTERY BUCKLING, tighten nuts on battery clamp until snug.**

The Classic® 300D Perkins is equipped with a wet charged battery. The charging current is automatically regulated when the battery is low (after starting the engine) to a trickle current when the battery is fully charged.

When replacing, jumping or otherwise connecting the battery to the battery cables, the proper polarity must be observed. This system is **NEGATIVE GROUND**.

Return to Section TOC
Return to Master TOC

TABLE OF CONTENTS - OPERATION SECTION

Operation B4

Engine Operation B4.2

Engine Break-In B4.3

Idler Operation B4.4

Return to Master TOC
Return to Master TOC
Return to Master TOC

Return to Section TOC
Return to Master TOC

ENGINE OPERATION

⚠ WARNING

Do not attempt to use this equipment until you have thoroughly read the engine manufacturer's manual supplied with your welder. It includes important safety precautions, detailed engine starting, operating and maintenance instructions, and parts lists.

ELECTRIC SHOCK can kill.
- **Do not touch electrically live parts or electrode with skin or wet clothing.**
- **Insulate yourself from work and ground**
- **Always wear dry insulating gloves.**

ENGINE EXHAUST can kill.
- **Use in open, well ventilated areas or vent exhaust outside.**

MOVING PARTS can injure.
- **Do not operate with doors open or guards off.**
- **Stop engine before servicing.**
- **Keep away from moving parts.**

See additional warning information at the front of this operator's manual.

Operate the welder with the doors closed. Leaving the doors open changes the designed air flow and can cause overheating.

STARTING THE CLASSIC® 300D PERKINS 404D-22 DIESEL ENGINE

1. Turn the "IDLER" switch to "HIGH".
2. Turn the "IGNITION" switch to "ON".
3. Press the Glow Plug button for 20 to 30 seconds. (maximum 60 seconds).
4. Press the Start button. When the engine starts running, release both buttons. If the engine fails to start in 20 seconds, wait 30 seconds and repeat the above procedure.
5. Observe the oil pressure. If no pressure shows within 30 seconds, stop the engine and consult the engine operating manual. To stop the engine, turn the "IGNITION" switch to "OFF".
6. If the engine protection warning light comes on during cranking or after start up, the "IGNITION" switch must be turned "OFF" to reset the engine protection system.
7. Allow the engine to run at high idle speed for several minutes to warm the engine. Stop the engine and recheck the oil level, after allowing sufficient time for the oil to drain into the pan. If the level is down, fill it to the full mark again. The engine controls were properly set at the factory and should require no adjusting when received.

COLD WEATHER STARTING:

With a fully charged battery and the proper weight oil, the engine should start satisfactorily even down to about -15°F (-26°C), it maybe desirable to install cold-starting aides.

Note: Extreme cold weather starting may require longer glow plug operation.

⚠ WARNING

Under NO conditions should ether or other starting fluids be used!

HIGH ALTITUDE OPERATION:

The engine will run correctly up to an altitude of 600m (2000ft.). If the engine is to be operated permanently at an altitude above this, the fuel consumption and exhaust emissions may be excessive.

Contact the Perkins Application Department for any engine adjustments that may be required.

STOPPING THE ENGINE

1. Turn the "IGNITION" switch to "OFF"

At the end of each day's welding, check the crankcase oil level, drain accumulated dirt and water from the water separator located on the fuel rail. Refill the fuel tank to minimize moisture condensation in the tank. Also, running out of fuel tends to draw dirt into the fuel system.

When hauling the welder between job sites, close the fuel feed valve on the separator located on the fuel rail.

If the fuel supply is cut off or runs out while the fuel pump is operating, air may be entrapped in the fuel distribution system. If this happens, bleeding of the fuel system may be necessary. Use qualified personnel to do this per the instructions in the ***MAINTENANCE section*** of this manual.

Return to Section TOC
Return to Master TOC

ENGINE BREAK-IN

Lincoln Electric selects high quality, heavy-duty industrial engines for the portable welding machines we offer. While it is normal to see a small amount of crankcase oil consumption during initial operation, excessive oil use, wet stacking (oil or tar like substance at the exhaust port), or excessive smoke is not normal.

Larger machines with a capacity of 350 amperes and higher, which are operated at low or no-load conditions for extended periods of time are especially susceptible to the conditions described above. To accomplish successful engine break-in, most diesel-powered equipment needs only to be run at a reasonably heavy load within the rating of the welder for some period of time during the engine's early life. However, if the welder is subjected to extensive light loading, occasional moderate to heavy loading of the engine may sometimes be necessary. Caution must be observed in correctly loading a diesel/generator unit.

1. Connect the welder output studs to a suitable resistive load bank. Note that any attempt to short the output studs by connecting the welding leads together, direct shorting of the output studs, or connecting the output leads to a length of steel will result in catastrophic damage to the generator and voids the warranty.
2. Set the welder controls for an output current and voltage within the welder rating and duty cycle. Note that any attempt to exceed the welder rating or duty cycle for any period of time will result in catastrophic damage to the generator and voids the warranty.
3. Periodically shut off the engine and check the crankcase oil level.

WELDER OPERATION

⚠ WARNING

ELECTRIC SHOCK can kill.
- **Do not touch electrically live parts or electrode with skin or wet clothing.**
- **Insulate yourself from work and ground.**

FUMES & GASES can be dangerous.
- **Keep your head out of the fumes.**
- **Use ventilation or exhaust to remove fumes from breathing zone.**

WELDING SPARKS can cause fire or explosion.
- **Keep flammable material away.**

ARC RAYS can burn.
- **Wear eye, ear, and body protection.**

DUTY CYCLE

The NEMA output rating of the Classic® 300D Perkins is 300 amperes at 32 arc volts on a 60% duty cycle (consult Specifications in this manual for alternate ratings). Duty cycle is based on a ten minute period; thus, the welder can be loaded at rated output for six minutes out of every ten minute period.

CONTROL OF WELDING CURRENT

⚠ CAUTION

DO NOT TURN THE "CURRENT RANGE SELECTOR" WHILE WELDING because the current may arc between the contacts and damage the switch.

The "Current Range Selector" provides five overlapping current ranges. The "Fine Current Adjustment" adjusts the current from minimum to maximum within each range. Open circuit voltage is also controlled by the "Fine Current Adjustment" permitting control of the arc characteristics.

A high open circuit voltage setting provides the soft "buttering" arc with best resistance to pop-outs preferred for most welding. To get this characteristic, set the "Current Range Selector" to the lowest setting that still provides the current you need and set the "Fine Current Adjustment" near maximum.

For example: to obtain 175 amps and a soft arc, set the "Current Range Selector" to the 190-120 position and then adjust the "Fine Current Adjustment" for 175 amps.

When a forceful "digging" arc is required, usually for vertical and overhead welding, use a higher "Current Range Selector" setting and lower open circuit voltage.

For example: to obtain 175 amps and a forceful arc, set the "Current Range Selector" to the 240-160 position and the "Fine Current Adjustment" setting to get 175 amps.

Some arc instability may be experienced with EXX10 electrodes when trying to operate with long arc techniques at settings at the lower end of the open circuit voltage range.

⚠ CAUTION

DO NOT attempt to set the "Current Range Selector" between the five points designated on the nameplate.

These switches have a spring loaded cam which almost eliminates the possibility of setting this switch between the designated points.

Return to Section TOC
Return to Master TOC

IDLER OPERATION

Start the engine with the "Idler" switch in the "High" position. Allow it to run at high idle speed for several minutes to warm the engine. ***See Specifications*** for operating speeds.

The idler is controlled by the "Idler" toggle switch on the welder control panel. The switch has two positions as follows:

1. In the "High" position, the idler solenoid deactivates, and the engine goes to high idle speed. The speed is controlled by the governor.

2. In the "Auto" / position, the idler operates as follows:

   a. When welding or drawing power for lights or tools (approximately 100 watts minimum) from the receptacles, the idler solenoid deactivates and the engine operates at high idle speed.

   b. When welding ceases or the power load is turned off, a preset time delay of about 15 seconds starts. This time delay cannot be adjusted.

   c. If the welding or power load is not re-started before the end of the time delay, the idler solenoid activates and reduces the engine to low idle speed.

AUXILIARY POWER

If a GFCI receptacle is tripped, See the ***MAINTENANCE*** section for detailed information on testing and resetting the GFCI receptacle.

The AC auxiliary power, supplied as a standard, has a rating of 3.0 KVA of 115/230 VAC (60 hertz).

With the 3.0 KVA, 115/230 VAC auxiliary power, one 115V GFCI and one 230V duplex, grounding type receptacles are provided. The circuit is protected with circuit breakers.

The rating of 3.0 KVA permits a maximum continuous current of 13 amps to be drawn from the 230 volt duplex receptacle. Or a total of 20 amps can be drawn from the 115 volt GFCI receptacle. The total combined load of all receptacles is not to exceed 3.0 KVA.

An optional power plug kit is available. When this kit is specified, the customer is supplied with a plug for each receptacle.

CLASSIC® 300D PERKINS WITH PERKINS 104D-22 DIESEL ENGINE TYPICAL FUEL CONSUMPTION DATA

Low Idle (1375 RPM)-No Load @ 45 Volts	0.28 gal/hr (1.06 ltrs/hr)
High Idle (1800 RPM)-No Load @ 96.6 Volts	0.42 gal/hr (1.59 ltrs/hr)
3000 Watts	0.59 gal/hr (2.23 ltrs/hr)
250 Amps @ 30 Volts	1.03 gal/hr (3.90 ltrs/hr)
300 Amps @ 32 Volts	1.37 gal/hr (5.19 ltrs/hr)

TABLE OF CONTENTS - ACCESSORIES SECTION

Accessories C-4

Optional Features C4.2

Wire Feeder Options C4.3

Return to Master TOC
Return to Master TOC
Return to Master TOC
Return to Master TOC

Return to Section TOC
Return to Master TOC
Return to Section TOC
Return to Master TOC
Return to Section TOC
Return to Master TOC
Return to Section TOC
Return to Master TOC

OPTIONAL FEATURES (Field Installed)

GENERAL OPTIONS

⚠ WARNING

Pipe Thawing with an arc welder can cause fire, explosion, damage to electric wiring or to the arc welder if done improperly. The use of an arc welder for pipe thawing is not approved by the CSA, nor is it recommended or supported by Lincoln Electric.

Power Plug Kit K802D
A power plug kit for the auxiliary power receptacles is available. (Provides a plug for each receptacle.)

Spark Arrestor Kit K903-1
Includes a heavy gage steel, approved spark arrestor, clamp and adapter for mounting to the muffler exhaust pipe.

TRAILER K953-1
Two-wheeled trailer with optional fender and light package. For highway use, consult applicable federal, state, and local laws regarding possible additional requirements. There is a choice of 2 hitches, a fender & a light package.

Ball Hitch K958-1
Lunette Eye Hitch K958-2
Fender & Light Kit K959-1
Cable Rack K965-1

Service Indicator Kit K1858-1
Provides a GO / NO-GO visual indication of air cleaner element useful service life. Filter service based on restriction readings allows the longest life possible from the filter and best engine protection.

STICK OPTIONS

ACCESSORY SET K704
Includes 35 feet (10 m) of electrode cable and 30 feet (9 m) of work cable, headshield, work clamp and electrode holder. Cable is rated at 500 amps, 60% duty cycle.

Remote Control Kit K924-5
Contains remote control rheostat and 100 ft. (30.5 m) cable for adjusting the OCV at the welding site.

TIG OPTIONS

TIG Module K930-2
Provides high frequency and shielding gas control for AC and DC GTAW (TIG) welding applications. Its compact case is designed for easy carrying, complete with a handle. High frequency bypass is built in. Additionally, the K936-3 control cable is required if remote control is used. If remote control is not used the K936-4 control cable is required.

PTA-26V TIG Torch K1783-9
Air cooled 200 amp torch equipped with valve for gas flow control. 25Ft. length.

Magnum Parts Kit For PTA-26V TIG Torch KP509

Control Cable K936-4 (required for TIG Module)
Control cable for connecting the K930-2 TIG Module.

Arc Start Switch K814 (required for TIG Module)
Comes with a 25ft.(7.6m) cable.
Attaches to the TIG torch for convenient finger control.

Contactor Kit K938-1 (required for TIG Module)
Provide “Cold” tungsten Tip when welding with the TIG Module.

Control Cable Extension K937-45
Allows the TIG Module to be operated at distances up to 200 ft. from the power source.Available in 45 ft. (13.7m).

Water Valve Kit K844-1
For use with a water-cooled TIG torch. Installs inside TIG Module.

WIRE FEEDER OPTIONS

Wire Feed Module K623-1
Provides constant voltage (CV) output with improved arc stability for Innershield welding. Excellent for MIG welding. Recommended wire feeders are the LN-7, LN-23P and LN-25. (Factory installed on the K1643-2).

LN-25 Wire Feeder K449

Portable CC/CV unit for flux-cored and MIG welding. Includes Gas Solenoid & Internal Contactor. Requires Wire Feed Module.

Remote Voltage Control Kit for LN-25 K444-2

Provides 25 ft. (7.5m) of remote output voltage control and output jumper (2 and 4) for machines having 14 pin MS-type connector.

Magnum® 350 Innershield Gun for LN-25 K126-2
For self-shielded wire with 15 ft. (4.5m) cable. For .062-3/32" (1.6-2.8mm) wire.

Magnum® 300 MIG Gun for LN-25 K1802-1

With 15 ft. (4.5m) cable. For .035"-.045" (0.9-1.2mm) gas shielded (Includes Connector Kit).

LN-23P Wire Feeder K316L-1

Portable CV unit for Innershield pipe welding. Control cable operates contactor inside Wire Feed Module for "cold" electrode. Requires LN-23P Adapter Kit (K350-1) and Gun and Cable Assembly.

LN-23P Adapter Kit K350-1

Required to adapt LN-23P to any Lincoln power source. Makes 14 pin connection at power source.

Magnum® 250 Innershield Gun for LN-23P K355-10

For lighter weight and easier handling. Rated 250 amps, 60% duty cycle. For .068 through 5/64" (1.7 through 2.0 mm) Innershield wire and includes reduced speed switch. For pipewelding, an M11476 62° gun tube is recommended.

62° gun tube for PipeWelding KP1909-1

Recommended modification for K355-X or K345-x guns with 90° gun tubes. Compatible with K126-1,-2, K264-8 and K355-10.

Magnum Spool Gun K487-25

Hand held semiautomatic wire feeder requires SG Control Module. 25 ft. length.

SG Control Module K488 (For Magnum Spool Gun)

The interface between the power source and the spool gun. Provides control of wire speed and gas flow.

Input Cable K691-10 (For SG Control Module)

For Lincoln engine drives with 14-pin MS-type connection, separate 115V NEMA receptacle and output stud connections. 10 ft. length.

Return to Section TOC
Return to Master TOC

NOTES

Return to Section TOC
Return to Master TOC
Return to Section TOC
Return to Master TOC
Return to Section TOC
Return to Master TOC
Return to Section TOC
Return to Master TOC

TABLE OF CONTENTS - MAINTENANCE SECTION

Maintenance D-4

Safety Precautions D4.2

Idler Maintenance D4.3

Engine Service D4.4

GFCI Receptacle Testing & Resetting Procedure D4.5

Major Component Location D4.6

Return to Master TOC
Return to Master TOC
Return to Master TOC
Return to Master TOC

Return to Section TOC
Return to Master TOC

SAFETY PRECAUTIONS

⚠ WARNING

Have qualified personnel do the maintenance work. Turn the engine off before working inside the machine. In some cases, it may be necessary to remove safety guards to perform required maintenance. Remove guards only when necessary and replace them when the maintenance requiring their removal is complete. Always use the greatest care when working near moving parts.

Do not put your hands near the engine cooling blower fan. If a problem cannot be corrected by following the instructions, take the machine to the nearest Lincoln Field Service Shop.

ELECTRIC SHOCK can kill.
- **Do not touch electrically live parts or electrode with skin or wet clothing.**
- **Insulate yourself from work and ground**
- **Always wear dry insulating gloves.**

ENGINE EXHAUST can kill.
- **Use in open, well ventilated areas or vent exhaust outside.**

MOVING PARTS can injure.
- **Do not operate with doors open or guards off.**
- **Stop engine before servicing.**
- **Keep away from moving parts.**

See additional warning information at front of this operator's manual.

GENERAL INSTRUCTIONS

1. Blow out the welder and controls with an air hose at least once every two months. In particularly dirty locations, this cleaning may be necessary once a week. Use low pressure air to avoid driving dirt into the insulation.

2. "Current Range Selector" contacts should not be greased. To keep the contacts clean, rotate the current control through its entire range frequently. Good practice is to turn the handle from maximum to minimum setting twice each morning before starting to weld.

3. Put a drop of oil on the "Current Range Selector" shaft at least once every month.

4. Follow the engine service schedule in this manual and the detailed maintenance and troubleshooting in the engine manufacturer's manual.

COOLING SYSTEM

The Classic® 300D Perkins is equipped with a pressure radiator. Keep the radiator cap tight to prevent loss of coolant. Clean and flush the cooling system periodically to prevent clogging the passage and overheating the engine. When antifreeze is needed, always use the permanent type.

BEARINGS

This welder is equipped with a double-shielded ball bearing having sufficient grease to last indefinitely under normal service. Where the welder is used constantly or in excessively dirty locations, it may be necessary to add one half ounce of grease per year. A pad of grease one inch wide, one inch long, and one inch high weighs approximately one half ounce. Overgreasing is far worse than insufficient greasing.

When greasing the bearings, keep all dirt out of the area. Wipe the fittings completely clean and use clean equipment. More bearing failures are caused by dirt introduced during greasing than from insufficient grease.

COMMUTATOR AND BRUSHES

⚠ WARNING

Uncovered rotating equipment can be dangerous. Use care so your hands, hair, clothing or tools do not catch in the rotating parts. Protect yourself from particles that may be thrown out by the rotating armature when stoning the commutator.

Shifting of the commutator brushes may result in:
- Change in machine output
- Commutator damage
- Excessive brush wear

Periodically inspect the commutator, slip rings, and brushes by removing the covers. DO NOT remove or replace these covers while the machine is running. Commutators and slip rings require little attention. However, if they are black or appear uneven, have them cleaned by an experienced maintenance man using fine sandpaper or a commutator stone. Never use emery cloth or paper for this purpose.

Replace brushes when they wear within 1/4" of the pigtail. A complete set of replacement brushes should be kept on hand. Lincoln brushes have a curved face to fit the commutator. Have an experienced maintenance man seat these brushes by lightly stoning the commutator as the armature rotates at full speed until contact is made across the full face of the brushes. After stoning, blow out the dust with low pressure air.

To seat slip ring brushes, position the brushes in place. Then slide one end of a piece of fine sandpaper between slip rings and brushes with the coarse side against the brushes. With slight additional finger pressure on top of the brushes, pull the sandpaper around the circumference of the rings - in direction of rotation only - until brushes seat properly. In addition, stone slip ring with a fine stone. Brushes must be seated 100%.

Arcing or excessive exciter brush wear indicates a possible misaligned shaft. Have an authorized Field Service Shop check and realign the shaft.

IDLER MAINTENANCE

⚠ CAUTION

Before doing electrical work on the idler printed circuit board, disconnect the battery.

When installing a new battery or using a jumper battery to start the engine, be sure the battery polarity is connected properly. The correct polarity is **negative** ground. Damage to the engine alternator and the printed circuit board can result from incorrect connection.

1. Proper operation of the idler requires good grounding of the printed circuit board, reed switch, and battery.

2. Idler solenoid is activated for low idle.

3. If desired, the welder can be used without automatic idling by setting the "Idler" switch to the "High" position.

NAMEPLATES

Whenever routine maintenance is performed on this machine - or at least yearly - inspect all nameplates and labels for legibility. Replace those which are no longer clear. Refer to the parts list for the replacement item number.

PURGING AIR FROM FUEL SYSTEM (PERKINS 404D-22 ENGINE)

⚠ WARNING

Keep fuel clear of open flames or arcs, allow engine to cool before working on the fuel system. Wipe up any spilled fuel and do not start engine until fumes clear.

If the engine is running rough and you suspect air has been trapped in the fuel system, (e.g. the engine was allowed to run out of fuel) perform the following steps using qualified personnel:

1. Loosen by two or three turns, the vent screw (Figure D4.3) on the fuel inlet connection.

FIGURE D4.3

2. Operate the electric fuel pump by turning the "Ignition" switch "ON" until fuel, free of air, flows from the vent point. Tighten the vent screw.

3. Contact your Perkins Engine repair facility if problems persist.

Return to Section TOC
Return to Master TOC

ENGINE SERVICE

EVERY DAY OR EVERY 8 HOURS	FIRST SERVICE - (20 / 50 HOURS)	EVERY 100 HOURS OR 3 MONTHS	EVERY 250 HOURS OR 6 MONTHS	EVERY 500 HOURS OR 12 MONTHS	EVERY 1000 HOURS	ENGINE SERVICE (NOTE 2) MAINTENANCE ITEM	TYPE OR QUANTITY
I						Coolant level	
			I			Concentration of antifreeze	50/50 Water/Ethylene Glycol
					R	Coolant (NOTE 3)	9.5qrts., 9.0L
I						Engine oil level (NOTE 1)	
	R			R		Engine oil (NOTE 1 & 3)	8.45qrts., 8L (including filter)
	R			R		Engine oil filter	Perkins #140517050
				R		Water Separator Element	Lincoln #M20840-A
C						Drain water separator & fuel strainer	
				R		Fuel filter canister	Perkins #2656613
			I			Tension of alternator drive belt	
			I			Alternator drive belt wear	
					R	Alternator drive belt	Perkins #080109107
C						Air filter (earlier check may be req'd)	
				R		Air filter element	Donaldson #P821575
					R	Renew the engine breather	
					I	Tighten cylinder head	
					I	Valve clearances	Intake .008", exhaust .008"
					I	Electrical systems	
					I	All nuts and bolts for tightness	
				I		Injector performance	Contact Perkins
I						Leaks or engine damage	
				I		Battery	

I = Inspect C = Clean R = Replace

Notes:

(1) Consult Engine Operators Manual for oil recommendations.
(2) Consult Engine Operators Manual for additional maintenance schedule information.
(3) Fill slowly! Ensure correct quantity is used.

Above operations to be carried out by trained personnel with reference to the workshop manual where necessary.
These preventative maintenance periods apply to average conditions of operation.
If necessary use shorter periods.

S26657 VN

Return to Section TOC
Return to Master TOC

GFCI RECEPTACLE TESTING AND RESETTING PROCEDURE

The GFCI receptacle should be properly tested at least once every month or whenever it is tripped. To properly test and reset the GFCI receptacle:

- If the receptacle has tripped, first carefully remove any load and check it for damage.
- If the equipment has been shut down, it must be restarted.
- The equipment needs to be operating at high idle speed and any necessary adjustments made on the control panel so that the equipment is providing at least 80 volts to the receptacle input terminals.
- The circuit breaker for this receptacle must not be tripped. Reset if necessary.
- Push the "Reset" button located on the GFCI receptacle. This will assure normal GFCI operation.
- Plug a night-light (with an "ON/OFF" switch) or other product (such as a lamp) into the GFCI receptacle and turn the product "ON".
- Push the "Test" button located on the GFCI receptacle. The night-light or other product should go "OFF".
- Push the "Reset" button, again. The light or other product should go "ON" again.

If the light or other product remains "ON" when the "Test" button is pushed, the GFCI is not working properly or has been incorrectly installed (miswired). If your GFCI is not working properly, contact a qualified, certified electrician who can assess the situation, rewire the GFCI if necessary or replace the device.

Return to Section TOC
Return to Master TOC

1. Case Front Assembly
2. Engine Assembly
3. Radiator Assembly
4. Fuel Tank & Mounting
5. Base & Lift Bale Assembly
6. Exciter & Stator
7. Welding Generator & Coupling
8. Roof & Doors
9. Generator Brush Holder

FIGURE D4.6 - MAJOR COMPONENT LOCATION

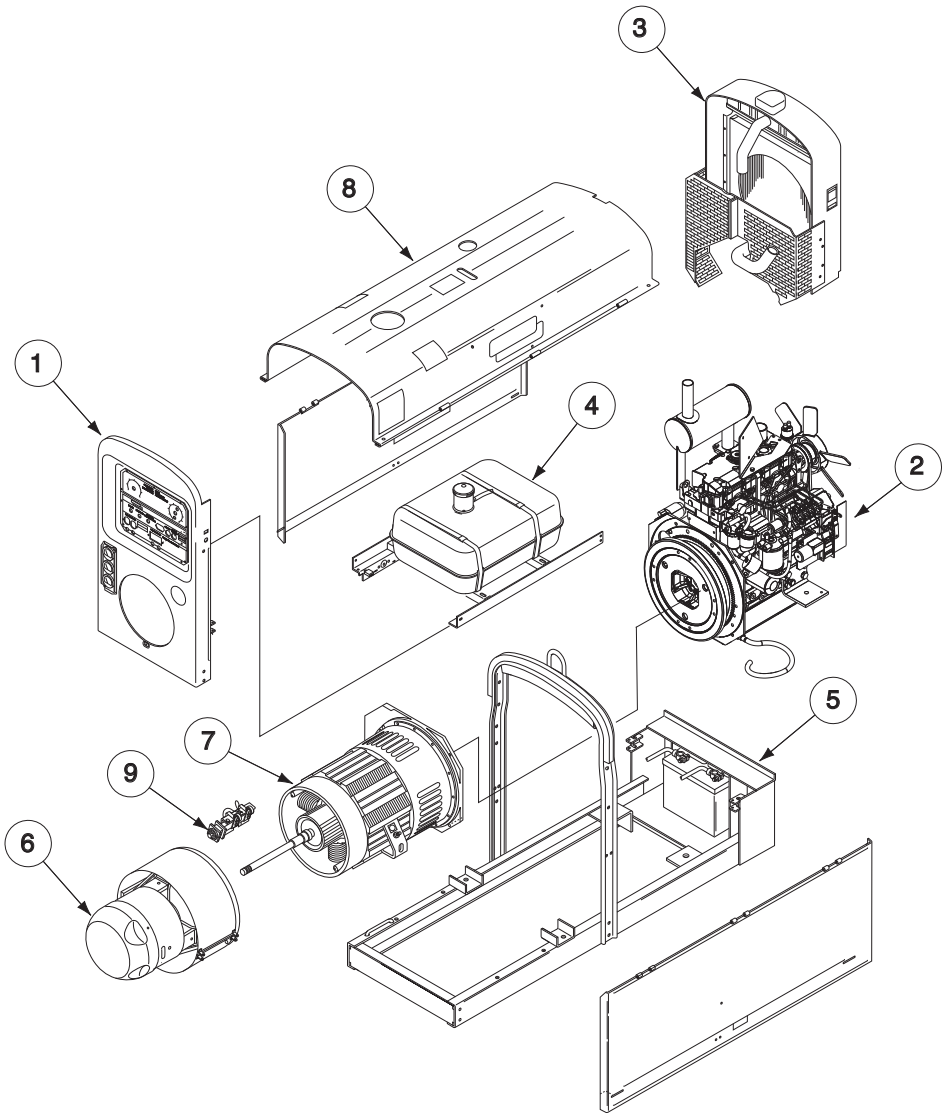

Return to Section TOC
Return to Master TOC

TABLE OF CONTENTS - INSTALLATION SECTION

Installation A5

Technical Specifications A5.2

Safety Precautions A5.3

Trailer A5.4

Battery Charging A5.5

Return to Master TOC

Return to Master TOC

Return to Master TOC

Return to Master TOC

TECHNICAL SPECIFICATIONS – CLASSIC® 300G (K1754-1)

INPUT - GASOLINE ENGINE

Make/Model	Description	Speed (RPM)	Displacement cu. in. (Ltrs.)	Ignition System	Capacities
GM 3.0 Liter Classic® 300G (K1754-1)	4 Cylinder 4 Cycle Water-Cooled Gasoline Engine Cast Iron Cylinder Block/Crankcase 53.0 HP @ 1800 RPM	High Idle 1800 Full Load 1800 Low Idle 1360	183.0(3.0)	Delco Voyager High Energy Distributor Type Electronic	Fuel: 15 gal. 57 Ltrs. Oil: 4.5 Qts. 4.3 Ltrs. Cooling 9.9 Qts. 9.4 Ltrs.

RATED OUTPUT - WELDER

DESCRIPTION	RATED DC OUTPUT* VOLTS @ RATED AMPS	DUTY CYCLE	DC CURRENT RANGE Fine Adjustment in each Range
300 Amp DC Welder All Copper Windings Pure DC Power Generator	30V @ 250A NEMA Rating 32V @ 300A	100% 60%	40-350 Amps

OUTPUT - GENERATOR

Auxiliary Power [1]
3000 Watts, 60 Hz. AC (26 Amps @ 115V), (13 Amps @ 230V)

ENGINE OPERATING LOAD	FUEL CONSUMPTION
Low Idle (1360 RPM)-No Load	.89 gal/hr (3.37 ltrs/hr)
High Idle (1800 RPM)-No Load	1.32 gal/hr (5.00 ltrs/hr)
AC Auxiliary-115 Volts-26 Amps	1.42 gal/hr (5.32 ltrs/hr)
50 Amps @ 22 Volts @ 60% Duty Cycle	1.24 gal/hr (4.70 ltrs/hr)
100 Amps @ 24 Volts @ 60 % Duty Cycle	1.27 gal/hr (4.82 ltrs/hr)
150 Amps @ 26 Volts @ 60% Duty Cycle	1.33 gal/hr (5.04 ltrs/hr)
200 Amps @ 28 Volts @ 60 % Duty Cycle	1.47 gal/hr (5.57 ltrs/hr)
250 Amps @ 30 Volts @ 60 % Duty Cycle	1.66 gal/hr (6.27 ltrs/hr)
300 Amps @ 32 Volts @ 60 % Duty Cycle	1.83 gal/hr (6.91 ltrs/hr)
250 Amps @ 30 Volts @ 100 % Duty Cycle	2.15 gal/hr (8.12 ltrs/hr)

PHYSICAL DIMENSIONS

HEIGHT	WIDTH	DEPTH	WEIGHT
40.94** in. 1039.9 mm	24.00 in. 609.6 mm	66.91in. 1700 mm	1330 lbs. (603kg.)
**Top of enclosure, add 8.0” (203.2mm) for exhaust			

(1) 115V will operate either 60 Hz. or 50/60 Hz. power tools, lights etc.

* Based on a 10 min. period.

Return to Section TOC
Return to Master TOC

Return to Section TOC
Return to Master TOC

SAFETY PRECAUTIONS

⚠ WARNING

Do not attempt to use this equipment until you have thoroughly read the engine manufacturer's manual supplied with your welder. It includes important safety precautions, detailed engine starting, operating and maintenance instructions, and parts lists.

ELECTRIC SHOCK can kill.
- **Do not touch electrically live parts or electrode with skin or wet clothing.**
- **Insulate yourself from work and ground**
- **Always wear dry insulating gloves.**

ENGINE EXHAUST can kill.
- **Use in open, well ventilated areas or vent exhaust outside.**

MOVING PARTS can injure.
- **Do not operate with doors open or guards off.**
- **Stop engine before servicing.**
- **Keep away from moving parts.**

See additional warning information at the front of this operator's manual.

PRE-OPERATION INSTALLATION

EXHAUST SPARK ARRESTER

Some federal, state or local laws may require that engines be equipped with exhaust spark arresters when they are operated in certain locations where unarrested sparks may present a fire hazard. The standard muffler included with this welder does not qualify as a spark arrester. When required by local regulations, a suitable spark arrester must be installed and properly maintained.

⚠ CAUTION

Use of an incorrect arrester may lead to engine damage or performance loss. Contact the engine manufacturer for specific recommendations.

LOCATION / VENTILATION

Always operate the welder with the doors closed. Leaving the doors open changes the designed air flow and may cause overheating.

The welder should be located to provide an unrestricted flow of clean, cool air. Also, locate the welder so that engine exhaust fumes are properly vented to an outside area.

⚠ CAUTION

DO NOT MOUNT OVER COMBUSTIBLE SURFACES.

Where there is a combustible surface directly under stationary or fixed electrical equipment, the surface shall be covered with a steel plate at least .06"(1.6mm) thick, which shall extend not more than 5.90"(150mm) beyond the equipment on all sides.

MACHINE GROUNDING

According to the United States National Electrical Code, the frame of this portable generator is not required to be grounded and is permitted to serve as the grounding means for cord connected equipment plugged into its receptacle.

Some state, local, or other codes or unusual operating circumstances may require the machine frame to be grounded. It is recommended that you determine the extent to which such requirements may apply to your particular situation and follow them explicitly. A machine grounding stud marked with the symbol ⏚ is provided on the welding generator frame foot. In general, if the machine is to be grounded, it should be connected with a #8 or larger copper wire to a solid earth ground such as a metal water pipe going into the ground for at least ten feet and having no insulated joints, or to the metal framework of a building which has been effectively grounded. The U.S. National Code lists a number of alternate means of grounding electrical equipment.

LIFT BAIL

A lift bail is provided for lifting with a hoist.

⚠ WARNING

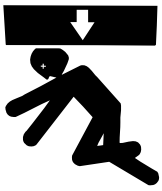

FALLING EQUIPMENT can cause injury.

- **Lift only with equipment of adequate lifting capacity.**
- **Be sure machine is stable when lifting.**
- **Do not lift this machine using lift bail if it is equipped with a heavy accessory such as trailer or gas cylinder.**
- **Do not lift machine if lift bail is damaged.**
- **Do not operate machine while suspended from lift bail.**

Return to Section TOC
Return to Master TOC

TRAILER (See *ACCESSORY Section*)

If the user adapts a non-Lincoln trailer, he must assume responsibility that the method of attachment and usage does not result in a safety hazard nor damage the welding equipment. Some of the factors to be considered are as follows:

1. Design capacity of trailer vs. weight of Lincoln equipment and likely additional attachments.
2. Proper support of, and attachment to, the base of the welding equipment so there will be no undue stress to the framework.
3. Proper placement of the equipment on the trailer to ensure stability side to side and front to back when being moved and when standing by itself while being operated or serviced.
4. Typical conditions of use, i.e., travel speed, roughness of surface on which the trailer will be operated; environmental conditions, likely maintenance.
5. Conformance with federal, state and local laws. (1)

(1) Consult applicable federal, state and local laws regarding specific requirements for use on public highways.

⚠ WARNING

VEHICLE MOUNTING

Improperly mounted concentrated loads may cause unstable vehicle handling and tires or other components to fail.

- **Only transport this Equipment on serviceable vehicles which are rated and designed for such loads.**
- **Distribute, balance and secure loads so vehicle is stable under conditions of use.**
- **Do not exceed maximum rated loads for components such as suspension, axles and tires.**
- **Mount equipment base to metal bed or frame of vehicle.**
- **Follow vehicle manufacturer's instructions.**

POLARITY CONTROL AND CABLE SIZES

With the engine off, route the electrode and work cables through the strain relief bracket on the base and connect to the studs located below the fuel tank mounting rail. (See size recommendations below.) For **Positive** polarity, connect the electrode cable to the terminal marked **"+"**. For **Negative** polarity, connect the electrode cable to the **"-"** stud. These connections should be checked periodically and tightened if necessary.

When welding at a considerable distance from the welder, be sure you use ample size welding cables.

RECOMMENDED COPPER CABLE SIZES			
		Cables Sizes for Combined Length of Electrode Plus Work Cable	
Amps	Duty Cycle	Up to 200 ft. 60.96 m	200 to 250 ft. 200 to76.2 m
250	100%	1	1/0
300	60%	1/0	2/0

PRE-OPERATION SERVICE

⚠ CAUTION

READ the engine operating and maintenance instructions supplied with this machine.

⚠ WARNING

GASOLINE can cause fire or explosion.

- **Stop engine while fueling.**
- **Do not smoke when fueling.**
- **Keep sparks and flame away from tank.**
- **Do not leave unattended while fueling.**
- **Wipe up spilled fuel and allow fumes to clear before starting engine.**
- **Do not overfill tank, fuel expansion may cause overflow.**

GASOLINE FUEL ONLY

OIL

This unit is supplied from the factory with the engine crankcase filled with a high quality SAE 10W/30 oil. This oil should be acceptable for most typical ambient temperatures.

Consult the engine operation manual for specific engine manufacturer's recommendations. Upon receipt of the welder, check the engine dipstick to be sure the oil is at the "full" mark. **DO NOT overfill.**

FUEL

Fill the fuel tank with the grade of fuel recommended in the Engine Operator's manual. Make sure the fuel valves on the sediment bowl and the water separator are in the open positions.

COOLING SYSTEM

The radiator has been filled at the factory with a 50-50 mixture of ethylene glycol antifreeze and water. Check the radiator level and add a 50-50 solution as needed (see engine manual or antifreeze container for alternate antifreeze recommendations)

BATTERY CHARGING

⚠ WARNING

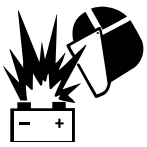

GASES FROM BATTERY can explode.
- **Keep sparks, flame and cigarettes away.**

BATTERY ACID can burn eyes and skin.
- **Wear gloves and eye protection and be careful when boosting, charging or working near battery.**

To prevent EXPLOSION when:

- **Installing a new battery - disconnect the negative cable from the old battery first and connect the negative cable to the new battery last.**
- **Connecting a battery charger remove the battery from the welder by disconnecting the negative cable first, then the positive cable and battery clamp. When reinstalling, connect the negative cable last.**
- **Using a booster - connect the positive lead to the battery first, then connect the negative lead to the ground lead on the base.**

To prevent ELECTRICAL DAMAGE when:

- **Installing a new battery.**
- **Using a booster.**

Use correct polarity - Negative Ground.

- **To prevent BATTERY DISCHARGE, if you have an ignition switch, turn it off when engine is not running.**

- **To prevent BATTERY BUCKLING, tighten nuts on battery clamp until snug.**

The Classic® 300G is equipped with a wet charged battery. The charging current is automatically regulated when the battery is low (after starting the engine) to a trickle current when the battery is fully charged.

When replacing, jumping or otherwise connecting the battery to the battery cables, the proper polarity must be observed. This system is **NEGATIVE GROUND**.

Return to Section TOC
Return to Master TOC
Return to Section TOC
Return to Master TOC
Return to Section TOC
Return to Master TOC
Return to Section TOC
Return to Master TOC

NOTES

Return to Section TOC
Return to Master TOC
Return to Section TOC
Return to Master TOC
Return to Section TOC
Return to Master TOC

TABLE OF CONTENTS - OPERATION SECTION

Operation B5

Safety Precautions B5.2

Welder Operation B5.3

Control of Welding Current B5.4

Return to Master TOC
Return to Master TOC
Return to Master TOC
Return to Master TOC

Return to Section TOC
Return to Master TOC

SAFETY PRECAUTIONS

⚠ WARNING

Do not attempt to use this equipment until you have thoroughly read the engine manufacturer's manual supplied with your welder. It includes important safety precautions, detailed engine starting, operating and maintenance instructions, and parts lists.

ELECTRIC SHOCK can kill.
- **Do not touch electrically live parts or electrode with skin or wet clothing.**
- **Insulate yourself from work and ground**
- **Always wear dry insulating gloves.**

ENGINE EXHAUST can kill.
- **Use in open, well ventilated areas or vent exhaust outside.**

MOVING PARTS can injure.
- **Do not operate with doors open or guards off.**
- **Stop engine before servicing.**
- **Keep away from moving parts.**

See additional warning information at the front of this operator's manual.

Operate the welder with the doors closed. Leaving the doors open changes the designed air flow and can cause overheating.

GENERAL DESCRIPTION

The Classic® 300G is a heavy duty, engine driven, DC arc welding power source, capable of providing constant current output for stick welding or DC TIG welding. This welder is wound with all copper coils, rated at 300 amps/32 Volts, and provides other Classic® features such as improved door latches and stainless hinges. With the addition of the optional K623-1 Wire Feed Module™ the Classic® 300G will provide constant voltage output for running the LN-7, LN-23P, or LN-25 wire feeders. The optional K924-4 Remote Control Kit (field installed) provides a switch, or K924-5 Remote Control Kits provide a receptacle and a remote control rheostat for remote fine current and open circuit voltage adjustment.

The Classic® 300G has an electronic Engine Protection system. In the event of sudden low oil pressure or high coolant temperature, the engine immediately shuts down. The Classic® 300G has a current range of 40-350 DC amps with output ratings as follows:
These units are also capable of providing 3 kVA of 115/230 volts of 60 cycle AC auxiliary power.

⚠ CAUTION

DO NOT MOUNT OVER COMBUSTIBLE SURFACES.
Where there is a combustible surface directly under stationary or fixed electrical equipment, the surface shall be covered with a steel plate at least .06"(1.6mm) thick, which shall extend not more than 5.90"(150mm) beyond the equipment on all sides.

The Classic® 300G uses the GM 3.0L industrial water-cooled gasoline engine.

RATED OUTPUT	DUTY CYCLE
250A @ 30V	100%
300A @ 32V	60%

DESIGN FEATURES

Control Panel

Both the engine and the welder controls are located on one recessed panel at the exciter end of the machine. The welder controls consist of a five step "Current Range Selector" switch and a "Fine Current Adjustment" rheostat. The welder is equipped with a "Start" button, an "Ignition" switch, an "Idler" control switch, and a "Glow Plug" button for easier cold weather starting.

The control panel also contains an engine temperature gauge, a battery charging ammeter, an oil pressure gauge, two three prong grounding type receptacles and four circuit breakers for auxiliary power.

All Copper Windings - For long life and dependable operation.

Engine Idler Control - The Classic® 300G is equipped with an electronic automatic engine idle control. It automatically increases and decreases engine speed **when starting and stopping welding or using auxiliary power**. A built-in time delay permits changing electrodes before the engine slows to its low idle speed. The "Idler" control switch on the panel locks the idler in high idle position when desired.

Auxiliary Power - 3.0 kVA of nominal 115/230V, 60Hz, AC. Output voltage is maintained within ± 10% at all loads up to rated capacity. (See ***Optional Features in Section C*** for Power Plug Kit.)

Welder Enclosure - The complete welder is rubber mounted on a rugged steel "C" channel base.

The output terminals are placed at the side of the machines so that they are protected by the door. The output terminals are labeled (+) and (-).

Cranking System - A 12 volt electric starter is standard.

Air Cleaner - Heavy duty two stage dry type.

Muffler-A Muffler and stainless steel exhaust outlet elbow are standard.

Engine Hour Meter - A meter to record hours of operation.

Engine Protection - The system shuts the engine down in the event of sudden low oil pressure or high coolant temperature. A warning light on the control panel will indicate such a fault. To reset the engine for restarting, turn the ignition switch off then on.

High Idle RPM (OCV) Adjustment- A potentiometer is mounted on the output rail that allows the operator to adjust the high idle engine speed between 1700 and 1800 RPM'S in 20 RPM increments. This is to allow further adjustment of the OCV. Total OCV adjustment range is about 10 Volts.

STARTING THE CLASSIC® 300G GM 3.0L GASOLINE ENGINE

1. Turn the "IDLER" switch to "HIGH".(Optional)
2. Turn the "IGNITION" switch to "ON".
3. Press the Start button. When the engine starts running, release button. If the engine fails to start in 20 seconds, wait 30 seconds and repeat the above procedure.
4. Observe the oil pressure. If no pressure shows within 30 seconds, stop the engine and consult the engine operating manual. To stop the engine, turn the "IGNITION" switch to "OFF".
5. Allow the engine to run at high idle speed for several minutes to warm up. If idle control switch is left in "Auto" position, engine will run at 1600 RPM until engine coolant temperature reaches 130 F.

Under NO conditions should ether or other starting fluids be used!

STOPPING THE ENGINE

- Turn the "IGNITION" switch to "OFF"

- At the end of each day's welding, check the crankcase oil level, drain accumulated dirt and water from the sediment bowl under the fuel tank and refill the fuel tank to minimize moisture condensation in the tank. Also, running out of fuel tends to draw dirt into the fuel system.

- When hauling the welder between job sites, close the fuel feed valve beneath the fuel tank.

- If the fuel supply is cut off or runs out while the fuel pump is operating, air may be entrapped in the fuel distribution system. If this happens, bleeding of the fuel system may be necessary. Refer to the instructions in the ***MAINTENANCE*** section of this manual.

REFER TO THE ENGINE

Operation and maintenance manual for additional information on the engine supplied with this welder.

WELDER OPERATION

DUTY CYCLE

⚠ WARNING

ELECTRIC SHOCK can kill.
- **Do not touch electrically live parts or electrode with skin or wet clothing.**
- **Insulate yourself from work and ground.**

FUMES & GASES can be dangerous.
- **Keep your head out of the fumes.**
- **Use ventilation or exhaust to remove fumes from breathing zone.**

WELDING SPARKS can cause fire or explosion.
- **Keep flammable material away.**

ARC RAYS can burn.
- **Wear eye, ear, and body protection.**

The NEMA output rating of the Classic® 300G is 300 amperes at 32 arc volts on a 60% duty cycle (consult Specifications in this manual for alternate ratings). Duty cycle is based on a ten minute period; thus, the welder can be loaded at rated output for six minutes out of every ten minute period.

Return to Section TOC
Return to Master TOC

Return to Section TOC
Return to Master TOC

CONTROL OF WELDING CURRENT

⚠ CAUTION

DO NOT TURN THE "CURRENT RANGE SELECTOR" WHILE WELDING because the current may arc between the contacts and damage the switch.

The "Current Range Selector" provides five overlapping current ranges. The "Fine Current Adjustment" adjusts the current from minimum to maximum within each range. Open circuit voltage is also controlled by the "Fine Current Adjustment" permitting control of the arc characteristics.

A high open circuit voltage setting provides the soft "buttering" arc with best resistance to pop-outs preferred for most welding. To get this characteristic, set the "Current Range Selector" to the lowest setting that still provides the current you need and set the "Fine Current Adjustment" near maximum. For example: to obtain 175 amps and a soft arc, set the "Current Range Selector" to the 190-120 position and then adjust the "Fine Current Adjustment" for 175 amps.

When a forceful "digging" arc is required, usually for vertical and overhead welding, use a higher "Current Range Selector" setting and lower open circuit voltage. For example: to obtain 175 amps and a forceful arc, set the "Current Range Selector" to the 240-160 position and the "Fine Current Adjustment" setting to get 175 amps.

Some arc instability may be experienced with EXX10 electrodes when trying to operate with long arc techniques at settings at the lower end of the open circuit voltage range.

⚠ CAUTION

DO NOT attempt to set the "Current Range Selector" between the five points designated on the nameplate.

These switches have a spring loaded cam which almost eliminates the possibility of setting this switch between the designated points.

IDLER CONTROL OPERATION

The idle is controlled by the "Idler" toggle switch on the welder control panel. The switch has two positions as follows:

1. In the "High" position, and the engine goes to high idle speed. The speed is controlled by the governor.
2. In the "Auto" / position, the engine operates as follows:

- When welding or drawing power for lights or tools (approximately 100-150 watts minimum) from the receptacles, the engine operates at high idle speed.
- When welding ceases or the power load is turned off, a preset time delay of about 10 seconds starts. This time delay cannot be adjusted.
- If the welding or power load is not re-started before the end of the time delay the throttle body controller reduces the engine to low idle speed.

AUXILIARY POWER

The AC auxiliary power, supplied as a standard, has a rating of 3.0 kVA of 115/230 VAC (60 hertz).

With the 3.0 kVA, 115/230 VAC auxiliary power, one 115V duplex and one 230V duplex, grounding type receptacle are provided. The circuit is protected with circuit breakers.

The rating of 3.0 kVA permits a maximum continuous current of 13 amps to be drawn from the 230 volt duplex receptacle. Or a total of 26 amps can be drawn from the 115 volt duplex receptacle. The 115 volt duplex receptacle has a configuration which permits 20 amps to be drawn from either half. The total combined load of all receptacles is not to exceed 3.0 kVA.

An optional power plug kit is available. When this kit is specified, the customer is supplied with a plug for each receptacle.

THROTTLE BODY DEICING SYSTEM

The welder has been designed to allow continuous year-round operation. Engine coolant is channeled through the Throttle Bottle Injector (TBI) housing to prevent the build up of ice on the TBI throat around the throttle plate. The electronic controller is programmed to automatically compensate for the build up of ice on the throttle plate. There will be no noticeable change in the operation of the welder should icing develop. On start-up, there is a possibility for the engine to overspeed (to a maximum of 2000 RPM) for up to 10 seconds after throttle body icing conditions have occurred. The electronic governor will correct itself for the new operating conditions and normal operation will resume.

TABLE OF CONTENTS - ACCESSORIES SECTION

Accessories C5

Optional Equipment C5.2

Return to Master TOC
Return to Master TOC
Return to Master TOC
Return to Master TOC

OPTIONAL EQUIPMENT (Field Installed)

Accessory Set (K704) - Includes 35 ft. (10.7m) electrode and 30 ft. (9.1m) work cables, headshield, work clamp and electrode holder.

⚠ WARNING

Pipe Thawing with an arc welder can cause fire, explosion, damage to electric wiring or to the arc welder if done improperly. The use of an arc welder for pipe thawing is not approved by the CSA, nor is it recommended or supported by Lincoln Electric.

Power Plug Kit (K802D) - A 20 amp power plug kit for the auxiliary power receptacles is available. (Provides a plug for each receptacle.)

Remote Control Kit (K924-4) - Contains switch, receptacle, remote control rheostat, and 100 ft (30.5m) cable for adjusting the OCV at the welding site.

Trailer (K953-1) - Two-wheeled trailer with optional fender and light package. For highway use, consult applicable federal, state, and local laws regarding possible additional requirements. Their is a choice of 2 hitches, a fender & a light package. **Order:**
K953-1 Trailer
K958-1 Ball Hitch
K958-2 Lunette Eye Hitch
K959-1 Fender & Light Kit.
K965-1 Cable Storage Rack

Remote Control Kit (K924-5) - Contains a remote control rheostat, and 100 ft. (30.5m) cable for adjusting the OCV at the welding site.

Remote Control Kit (K2464-1) - Contains a remote control rheostat (for adjusting the CC "STICK" OCV), remote control potentiometer (for adjusting the CV "WIRE" OCV), and 100ft.(30.5m) cable.

Wire Feed Module (K623-1) - Provides constant voltage (CV) output with improved arc stability for Innershield welding. Excellent for MIG welding. Recommended wire feeders are the LN-7, LN-23P and LN-25.

GFCI Receptacle Kit (K1690-1) - Includes one UL approved 115V ground fault circuit interrupter duplex type receptacle and installation instructions. Replaces the factory installed 115V duplex receptacle. Each receptacle of the GFCI duplex is rated at 20 amps. Maximum total current from the GFCI duplex is limited to 20 amps.

TIG Module - Portable, high frequency unit with gas valve for TIG welding. Rated at 300 amps / 60% duty cycle. (Request Publication E3.205).
Order K930-2

Control Cable - Connects TIG Module to the Classic® 300G.
Order K936-4

Arc Start Switch - Provides on/off control at the TIG Module.
Order K814

Contactor Kit - For use with TIG Module.
Order K938-1

Control Cable Extension - Allows the TIG Module to be operated at distances up to 200 ft. from the power source. Available length: 45 ft. (13.7m).
Order K937-45

Water Valve Kit - For use with a water-cooled TIG Torch. Installs inside of TIG Module.
Order K844-1

K2261-1 OIL DRAIN KIT - Includes ball valve, hose and clamp.

Return to Section TOC
Return to Master TOC

TABLE OF CONTENTS - MAINTENANCE SECTION

Maintenance D5

Safety Precautions D5.2

Idler Control Maintenance D5.3

Engine Service D5.4

Major Component Location D5.5

Return to Master TOC

Return to Master TOC

Return to Master TOC

Return to Master TOC

Return to Section TOC
Return to Master TOC

SAFETY PRECAUTIONS

⚠ WARNING

Have qualified personnel do the maintenance work. Turn the engine off before working inside the machine. In some cases, it may be necessary to remove safety guards to perform required maintenance. Remove guards only when necessary and replace them when the maintenance requiring their removal is complete. Always use the greatest care when working near moving parts.

Do not put your hands near the engine cooling blower fan. If a problem cannot be corrected by following the instructions, take the machine to the nearest Lincoln Field Service Shop.

ELECTRIC SHOCK can kill.
- **Do not touch electrically live parts or electrode with skin or wet clothing.**
- **Insulate yourself from work and ground**
- **Always wear dry insulating gloves.**

ENGINE EXHAUST can kill.
- **Use in open, well ventilated areas or vent exhaust outside.**

MOVING PARTS can injure.
- **Do not operate with doors open or guards off.**
- **Stop engine before servicing.**
- **Keep away from moving parts.**

See additional warning information at front of this operator's manual.

GENERAL INSTRUCTIONS

- Blow out the welder and controls with an air hose at least once every two months. In particularly dirty locations, this cleaning may be necessary once a week. Use low pressure air to avoid driving dirt into the insulation.

- "Current Range Selector" contacts should not be greased. To keep the contacts clean, rotate the current control through its entire range frequently. Good practice is to turn the handle from maximum to minimum setting twice each morning before starting to weld.

- Put a drop of oil on the "Current Range Selector" shaft at least once every month.

- When necessary, remove the sediment bowl, if so equipped, from beneath the fuel tank and clean out any accumulated dirt and water.

- Follow the engine service schedule in this manual and the detailed maintenance and troubleshooting in the engine manufacturer's manual.

COOLING SYSTEM

The Classic® 300G is equipped with a pressure radiator. Keep the radiator cap tight to prevent loss of coolant. Clean and flush the cooling system periodically to prevent clogging the passage and overheating the engine. When antifreeze is needed, always use the permanent type. Capacity = 9.9 qts (9.4 Ltrs.).

BEARINGS

This welder is equipped with a double-shielded ball bearing having sufficient grease to last indefinitely under normal service. Where the welder is used constantly or in excessively dirty locations, it may be necessary to add one half ounce of grease per year. A pad of grease one inch wide, one inch long, and one inch high weighs approximately one half ounce. Overgreasing is far worse than insufficient greasing.

When greasing the bearings, keep all dirt out of the area. Wipe the fittings completely clean and use clean equipment. More bearing failures are caused by dirt introduced during greasing than from insufficient grease.

COMMUTATOR AND BRUSHES

⚠ WARNING

Uncovered rotating equipment can be dangerous. Use care so your hands, hair, clothing or tools do not catch in the rotating parts. Protect yourself from particles that may be thrown out by the rotating armature when stoning the commutator.

Shifting of the commutator brushes may result in:
- Change in machine output
- Commutator damage
- Excessive brush wear

Periodically inspect the commutator, slip rings, and brushes by removing the covers. DO NOT remove or replace these covers while the machine is running. Commutators and slip rings require little attention. However, if they are black or appear uneven, have them cleaned by an experienced maintenance man using fine sandpaper or a commutator stone. Never use emery cloth or paper for this purpose.

Replace brushes when they wear within 1/4" of the pigtail. A complete set of replacement brushes should be kept on hand. Lincoln brushes have a curved face to fit the commutator. Have an experienced maintenance man seat these brushes by lightly stoning the commutator as the armature rotates at full speed until contact is made across the full face of the brushes. After stoning, blow out the dust with low pressure air.

To seat slip ring brushes, position the brushes in place. Then slide one end of a piece of fine sandpaper between slip rings and brushes with the coarse side against the brushes. With slight additional finger pressure on top of the brushes, pull the sandpaper around the circumference of the rings - in direction of rotation only - until brushes seat properly. In addition, stone slip ring with a fine stone. Brushes must be seated 100%.

Arcing or excessive exciter brush wear indicates a possible misaligned shaft. Have an authorized Field Service Shop check and realign the shaft.

IDLER CONTROL MAINTENANCE

⚠ CAUTION

Before doing electrical work, disconnect the battery.

When installing a new battery or using a jumper battery to start the engine, be sure the battery polarity is connected properly. The correct polarity is **negative** ground. Damage to the engine alternator and the TBI controller can result from incorrect connection.

- Proper operation of the idle control requires good grounding of the TBI controller, and battery.
- If desired, the welder can be used without automatic idling by setting the "Idler" switch to the "High" position.

NAMEPLATES

Whenever routine maintenance is performed on this machine - or at least yearly - inspect all nameplates and labels for legibility. Replace those which are no longer clear. Refer to the parts list for the replacement item number.

PURGING AIR FROM FUEL SYSTEM (GM 3.0L ENGINE)

⚠ WARNING

Keep fuel clear of open flames or arcs, allow engine to cool before working on the fuel system. Wipe up any spilled fuel and do not start engine until fumes clear.

The fuel system operates as follows, The fuel pump will operate for a maximum of 3 seconds when the ignition switch is turned "ON". The pump will restart once the start button is pushed and continue when the engine starts. To purge the system of air if fuel lines have been removed, the ignition switch can be toggled "ON" and "OFF" (at 3 second intervals) until fuel flows through the fuel return line in the neck of the tank.

The GM 3.0L engine does not require the system to be bled. If the engine runs out of fuel and the tank is refilled, the engine will restart within a few seconds if the engine is properly tuned.

ENGINE MAINTENANCE

Refer to the engine operation and maintenance manual for additional information on the engine.

Return to Section TOC
Return to Master TOC

ENGINE SERVICE

EVERY DAY OR EVERY 8 HOURS	FIRST SERVICE - (50 HOURS)	EVERY 100 HOURS OR 3 MONTHS	EVERY 200 HOURS OR 6 MONTHS	EVERY 600 HOURS OR 12 MONTHS	ENGINE SERVICE (NOTE 2) MAINTENANCE ITEM	TYPE OR QUANTITY
I					Coolant level	
				I	Concentration of antifreeze	50/50 Water/Ethylene Glycol
			I		Radiator for contamination or blockage	
				R	Coolant (NOTE 3)	9.9 qrts, 9.4L
I					Engine oil level (NOTE 1)	
	R		R		Engine oil (NOTE 1 & 3)	4.5 qrts, 4.3L (including filter)
	R		R		Engine oil filter	AC PF25
	C	C			Drain fuel bowl	
				R	Fuel filter canister	PSI# 32500292
I					Tension of Alternator/ Fan belt	
			I		Alternator/ Fan belt wear	
				R	Alternator Belt	Good Year 11AV0955
				R	Fan Belt	Good Year 11AV1220
				I	Tighten cylinder head	
				R	Spark Plugs (Gap = 0.040)	4 - AC R46TS
				I	Electrical systems	
				I	All nuts and bolts for tightness	
4	C	C			Air filter (earlier check may be req'd)	
				R	Air filter element	Donaldson#P181050 Nelson #70206N
I					Leaks or engine damage	
			I		Battery	BCI GROUP 45

I = Inspect *C = Clean* *R = Replace*

Notes (1) Consult Engine Operators Manual for oil Recommendations.
(2) Consult engine operators manual for additional maintenance schedule information.
(3) Fill slowly! Ensure correct quantity is used.
(4) Clean the air filter if the engine is operating in very dusty conditions.

2/01

Above operations to be carried out by trained personnel with reference to the workshop manual where necessary.
These preventative maintenance periods apply to average conditions of operation.
If necessary, use shorter periods.

S20919-3

Return to Section TOC
Return to Master TOC

1. Case Front Assembly
2. Engine Assembly
3. Radiator Assembly
4. Fuel Tank & Mounting
5. Base & Lift Bale Assembly
6. Exciter and Stator
7. Welding Generator & Coupling (2 of 2)
8. Roof & Doors
9. Alternator Brush Holder
10. Generator Brush Holder

FIGURE D5.5 - MAJOR COMPONENT LOCATION

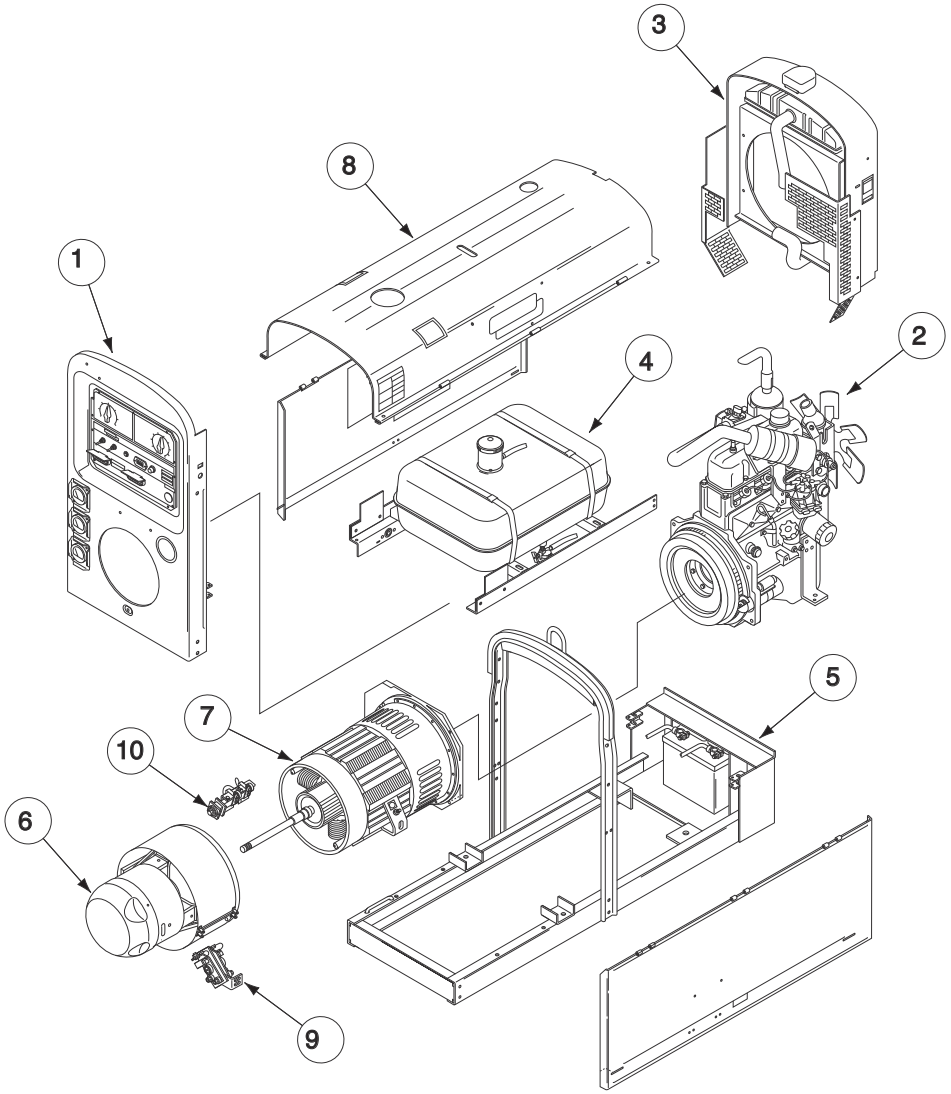

Return to Section TOC
Return to Master TOC

NOTES

Return to Section TOC
Return to Master TOC
Return to Section TOC
Return to Master TOC
Return to Section TOC
Return to Master TOC

TABLE OF CONTENTS-THEORY OF OPERATION SECTION

Theory of Operation **E-1**

General Description E-2/E-3

Battery, Starter, Engine & Alternator E-4/E-5

Engine, Generator Armature, Frame, Alternator Stator & Rotor E-6

Codes E-7/E-8

Engine Idler Circuit E-9/E-10

DC Generator Machines E-11

Return to Master TOC
Return to Master TOC
Return to Master TOC

FIGURE E.1 - GENERAL DESCRIPTION (Classic® 300G, Zenith Fuel System/GM Engine)

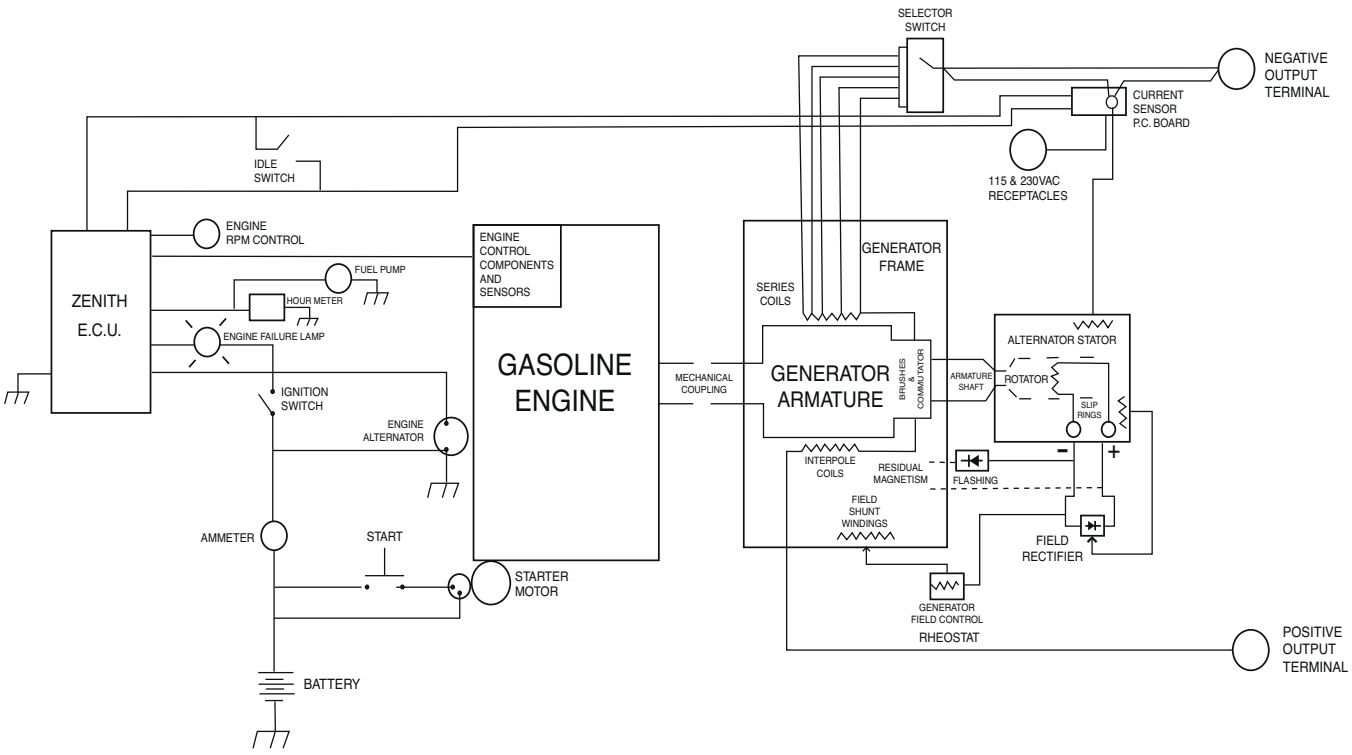

GENERAL DESCRIPTION

The Classic® 300 welding machines are heavy duty, engine driven DC arc welding power sources capable of providing constant current output for stick welding or DC TIG welding. Also, a total of 3000 watts of auxiliary power is available at the 115 or 230VAC receptacles. The Classic® 300 is manufactured with all copper windings.

NOTE: Unshaded areas of Block Logic Diagram are the subject of discussion

Return to Section TOC
Return to Master TOC

FIGURE E.2 - GENERAL DESCRIPTION (Classic® 300D, Perkins Engine)

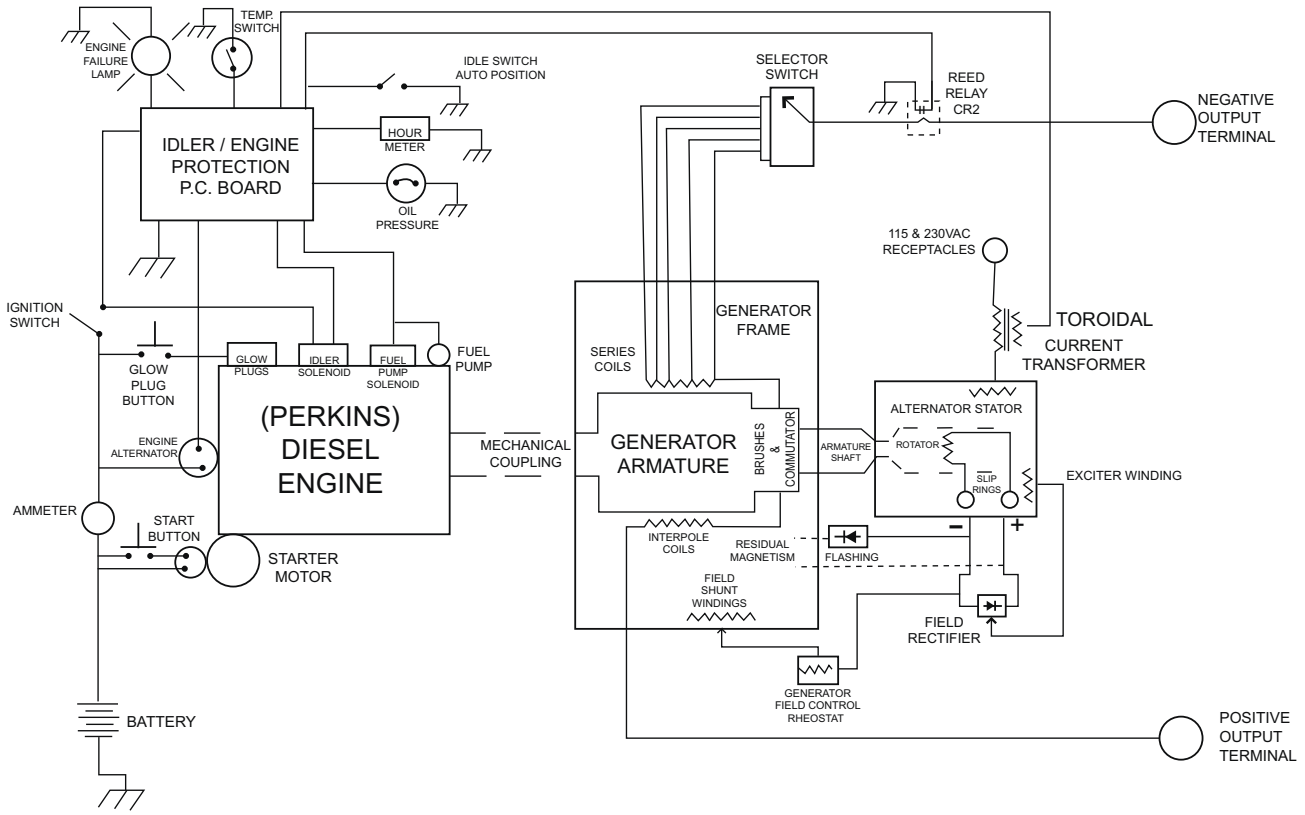

FIGURE E.3 - GENERAL DESCRIPTION (Classic® 300D, Kubota Engine)

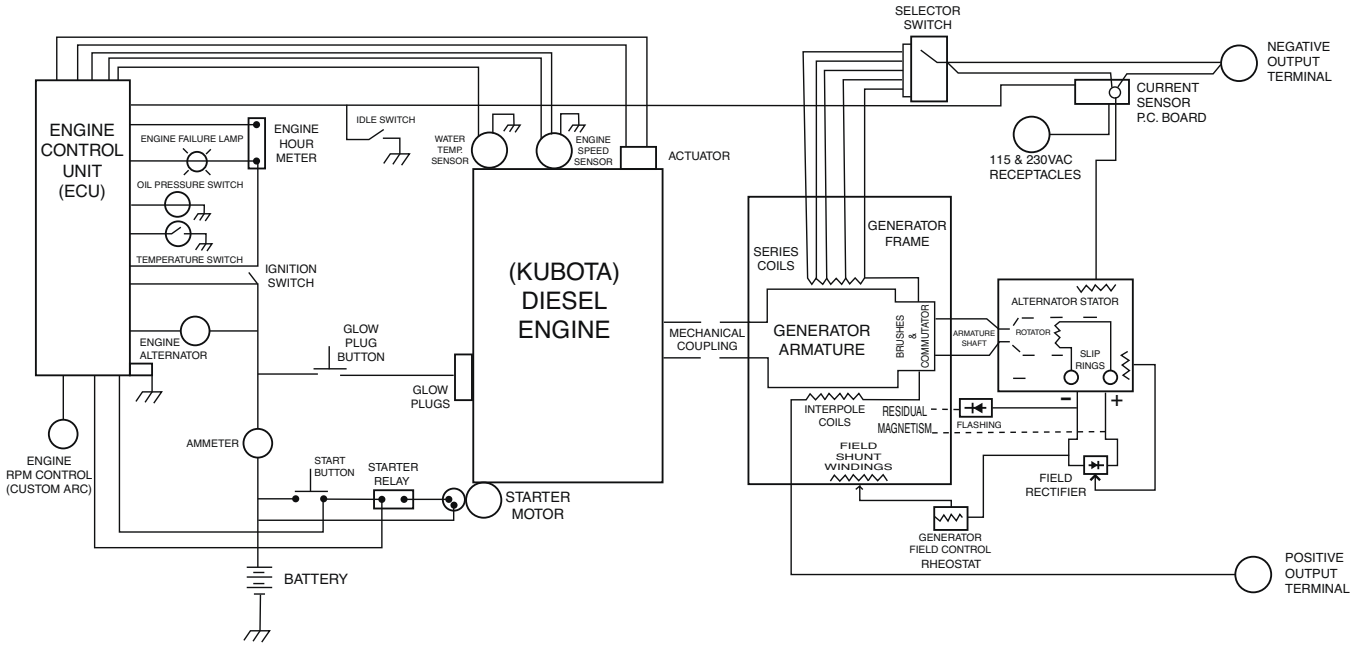

NOTE: Unshaded areas of Block Logic Diagram are the subject of discussion

LINCOLN® ELECTRIC

Return to Section TOC
Return to Master TOC

FIGURE E.4 - BATTERY, STARTER, ENGINE, ALTERNATOR & PROTECTION CIRCUITS (Classic® 300G, Zenith Fuel System/GM Engine)

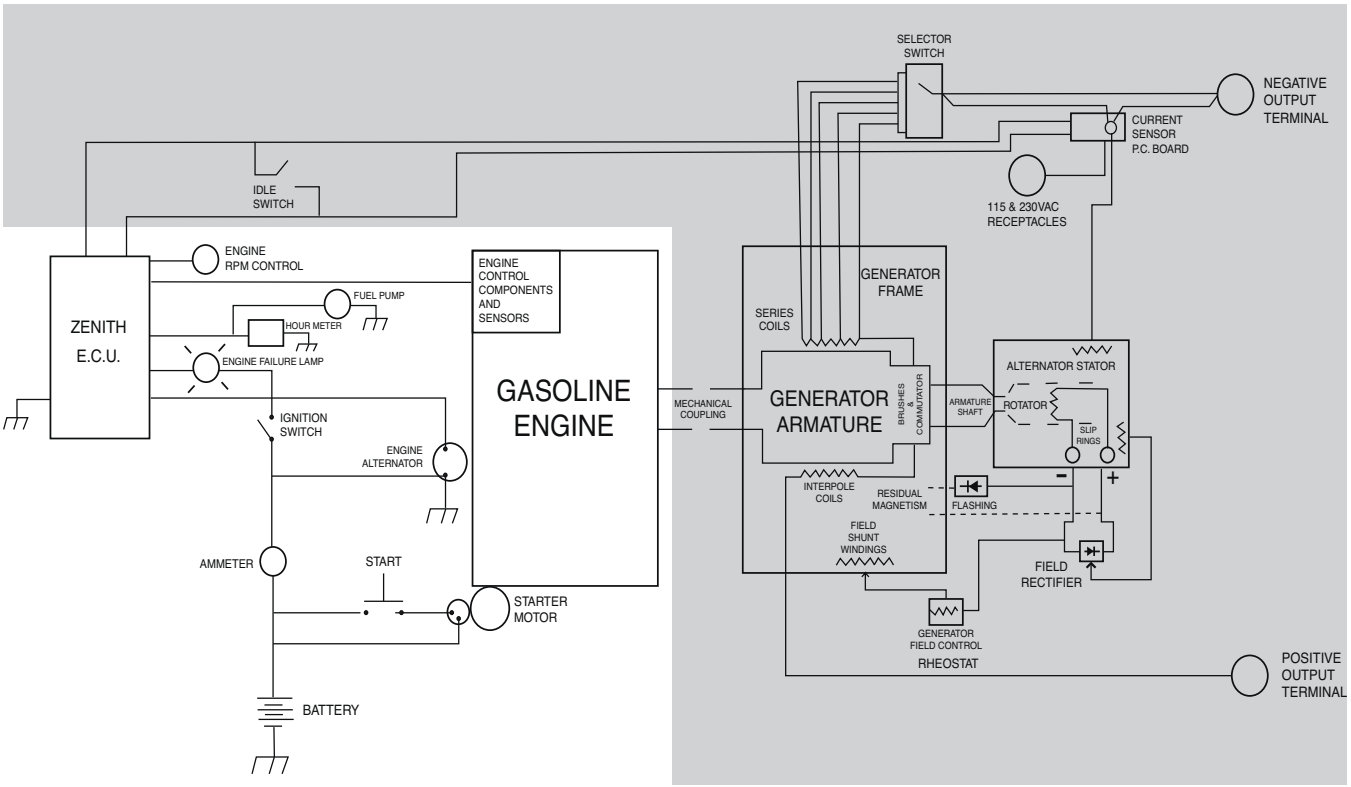

BATTERY, STARTER, ENGINE, ALTERNATOR & PROTECTION CIRCUITS

The 12VDC battery powers the starter motor and, through the ignition switch, the engine protection circuitry. In the event of a low oil pressure or a high coolant temperature condition, the engine protection system shuts the engine off.

The idle / engine protection PC board or, the engine control unit (ECU) monitors the oil pressure sensor, and the coolant temperature sensor. If either sensor " faults," the engine is shut down.

The engine alternator supplies "charging" current for the battery circuit. If the alternator would cease to function correctly, due to a broken fan belt or other malfunction, the engine protection system would shut the engine down.

NOTE: Unshaded areas of Block Logic Diagram are the subject of discussion

Return to Section TOC
Return to Master TOC

FIGURE E.5 - BATTERY, STARTER, ENGINE, ALTERNATOR & PROTECTION CIRCUITS (Classic® 300D, Perkins Engine)

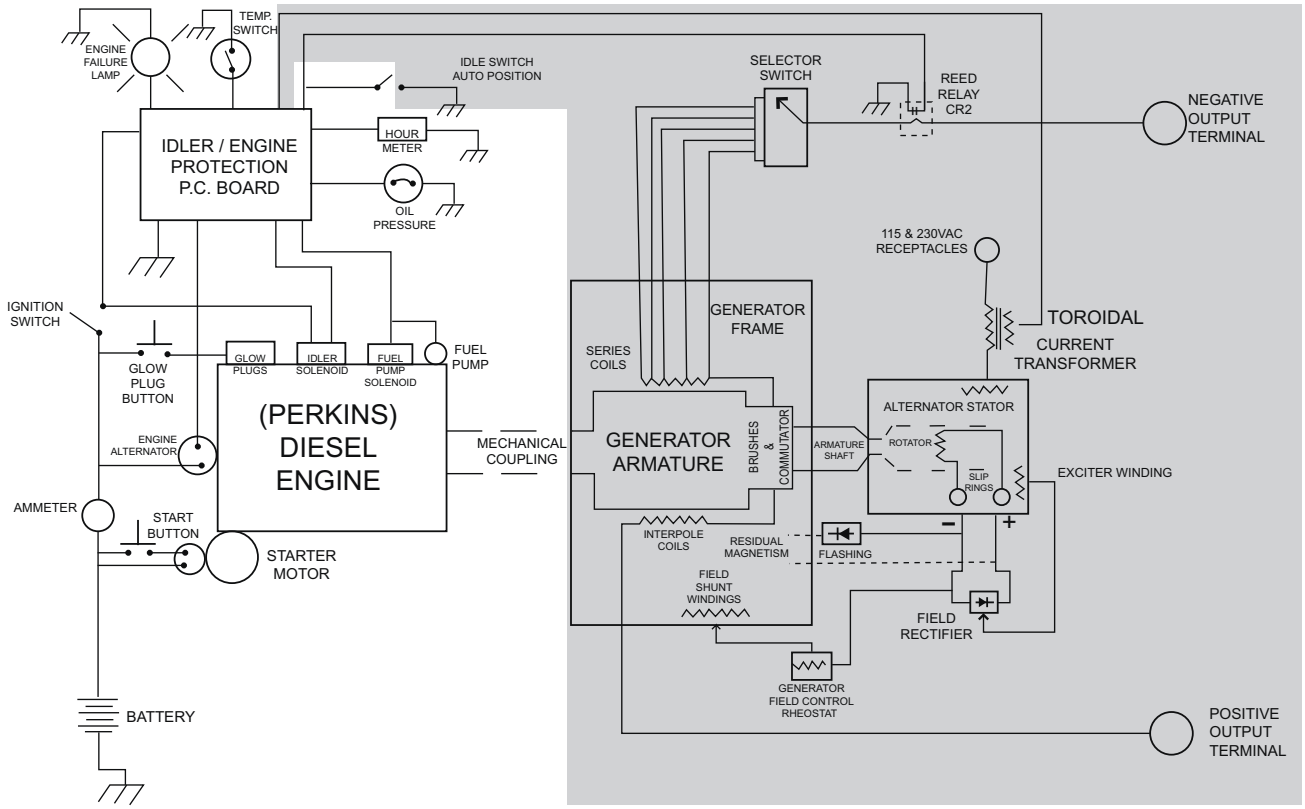

FIGURE E.6 - BATTERY, STARTER, ENGINE, ALTERNATOR & PROTECTION CIRCUITS (Classic® 300D, Kubota Engine)

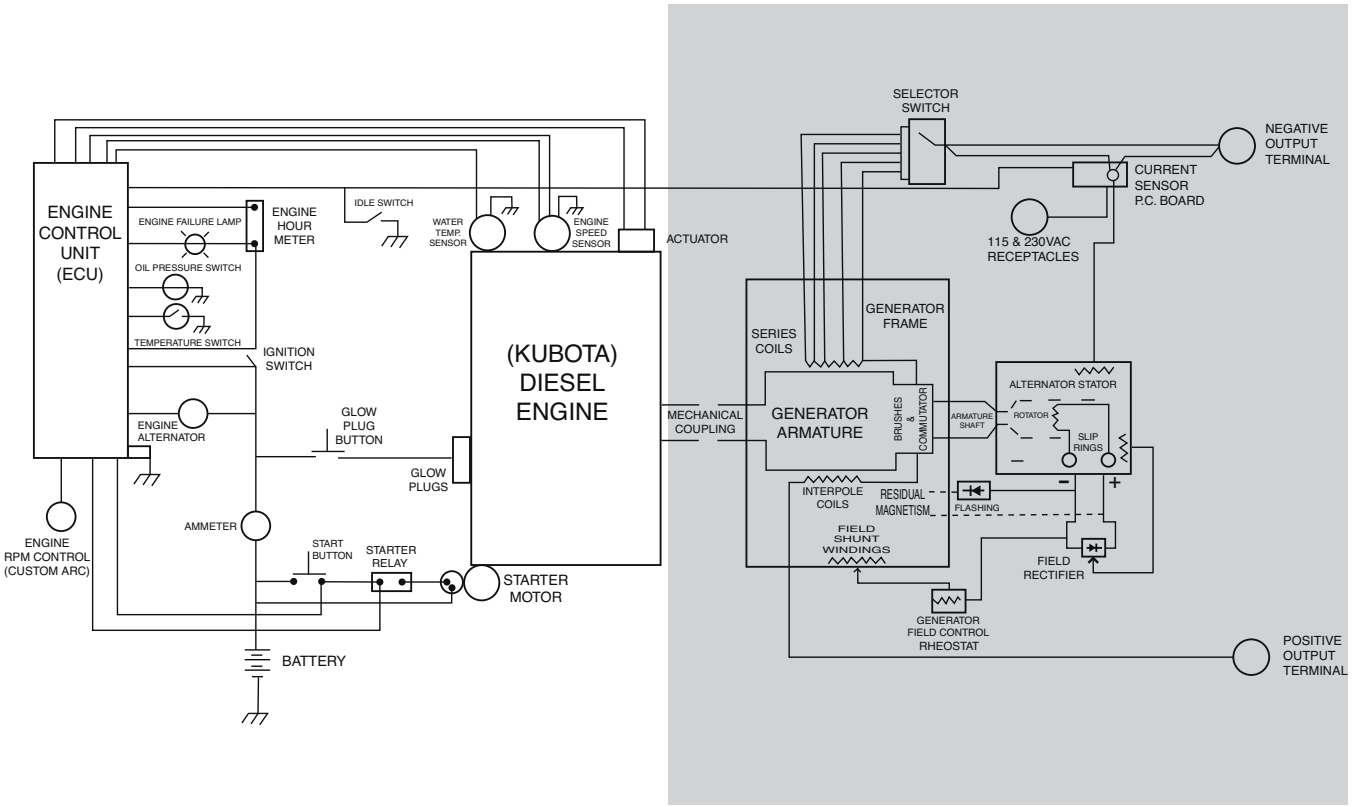

NOTE: Unshaded areas of Block Logic Diagram are the subject of discussion

Return to Section TOC
Return to Master TOC

Return to Section TOC
Return to Master TOC

ENGINE, GENERATOR ARMATURE AND FRAME, ALTERNATOR STATOR AND ROTOR

EXCITATION (FLASHING)

When the engine is started and running, voltage produced by residual magnetism in the DC welding generator passes through a “flashing” diode, and is applied to the alternator rotor via a brush and slip ring configuration. This excitation (“flashing”) voltage magnetizes the rotor lamination. The alternator rotor is connected to the armature shaft, which is mechanically coupled to the engine. The rotating magnet (rotor) induces a voltage in the stationary windings of the alternator stator.

AUXILIARY AND FIELD FEEDBACK COILS

There are two isolated windings incorporated in the stator lamination assembly. One of these windings is tapped and provides 115VAC and 230VAC of auxiliary power to the appropriate receptacles. The other 115VAC isolated winding is rectified to a DC voltage and is used to supply field feedback voltage to the rotor. It also supplies voltage, through the generator field rheostat control, to the field shunt windings in the main generator frame.

INTERPOLE AND SERIES COILS

The generator armature rotates within the magnetic field created by the shunt field windings. A DC voltage is induced in the armature and is transferred, through the armature commutator and brushes, to the series and interpole coils. The interpole coils, which are connected in series with the positive output terminal, are located so as to counteract any magnetic influences that could cause mechanical distortion in the rotating armature. The series coils are designed to oppose or “buck” the DC voltage that is generated in the armature.

CURRENT RANGE SELECTOR

The selector switch acts as a coarse current adjustment by allowing for varying amounts of series windings to be included in the welding current path. The series coils and selector switch are connected in series with the negative output terminal.

FINE CURRENT ADJUSTMENT

The field rheostat control functions as a fine output current adjustment by controlling the current through the shunt windings. This controls the amount of magnetism created in the shunt field windings. Open circuit weld voltage can also be controlled by the field rheostat control.

ENGINE HIGH IDLE RPM (OCV) ADJUSTMENT

Classic® 300G (Codes 10659, 10912, and 11135) The Classic® 300G utilizes an electronic engine control system manufactured by Zenith fuel systems LLC. This system maintains a steady RPM by constantly sensing engine speed and making adjustments as needed.

A potentiometer mounted on the output rail allows the operator to adjust the high idle engine speed between 1700 and 1800 RPM’s in 20 RPM increments. This is to allow further adjustment of the welding generator open circuit voltage (OCV). Total OCV adjustment range is about 10 Volts.

NOTE: Unshaded areas of Block Logic Diagram are the subject of discussion

Return to Section TOC
Return to Master TOC

FIGURE E.8 - CLASSIC® 300D, PERKINS ENGINE

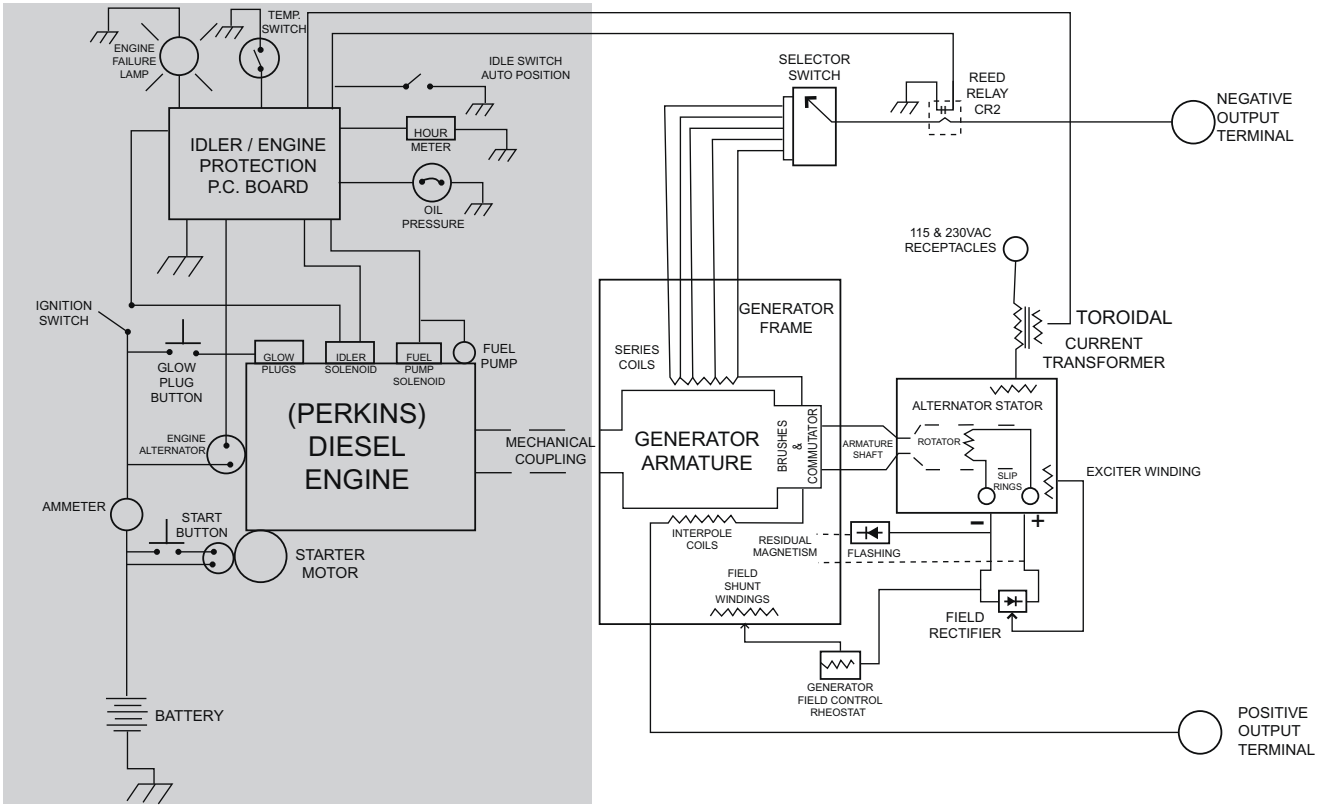

FIGURE E.9 - CLASSIC® 300D, KUBOTA ENGINE

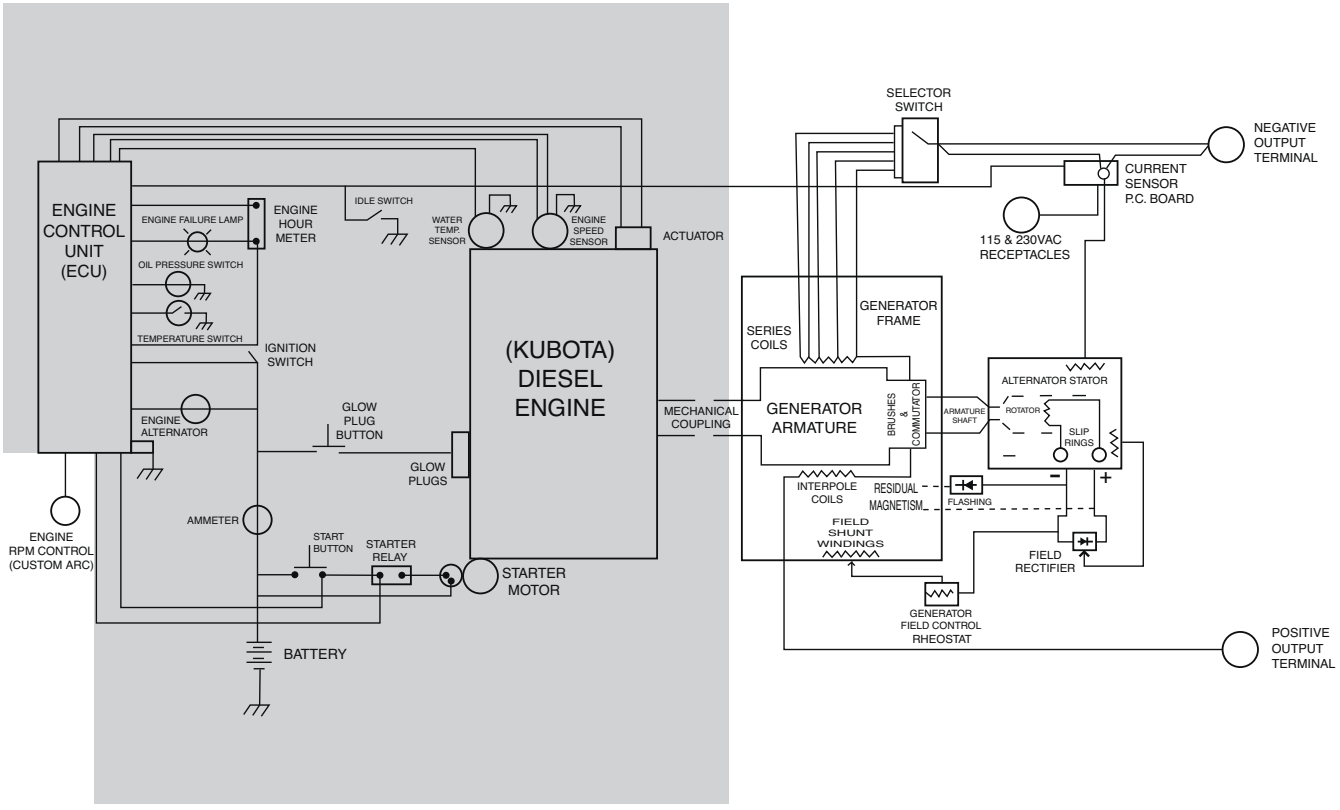

NOTE: Unshaded areas of Block Logic Diagram are the subject of discussion

Return to Section TOC
Return to Master TOC

Classic® 300D Perkins (Codes 10545, 10546, 10657, 10658, 10911, 10927, 11110, 11111, 11248, 11249, 11280, 11281, 11411, 11412, 11472, and 11473)

The Perkins powered Classic® 300D machines have a mechanical governor that maintains the engine RPM when the engine is running at high speed. There is no operator control for RPM as there is with 300G or 300D Kubota.

Classic® 300D Kubota (Codes: 11112, 11113, 11243, 11244, 11413, 11414, 11474, and 11475)

The Kubota powered Classic® 300D machines utilize an electronic engine control system which is a part of the Kubota engine. This system maintains a steady RPM by constantly sensing engine speed and making adjustments as needed.

The Custom Arc Control, a potentiometer mounted on the lower right control panel, allows the operator to adjust the high idle engine speed between 1650 and 1800 RPM. This is to allow further adjustment of the OCV. Total OCV adjustment range is about 15 volts.

FIGURE E.7 - CLASSIC® 300G, ZENITH FUEL SYSTEM / GM ENGINE

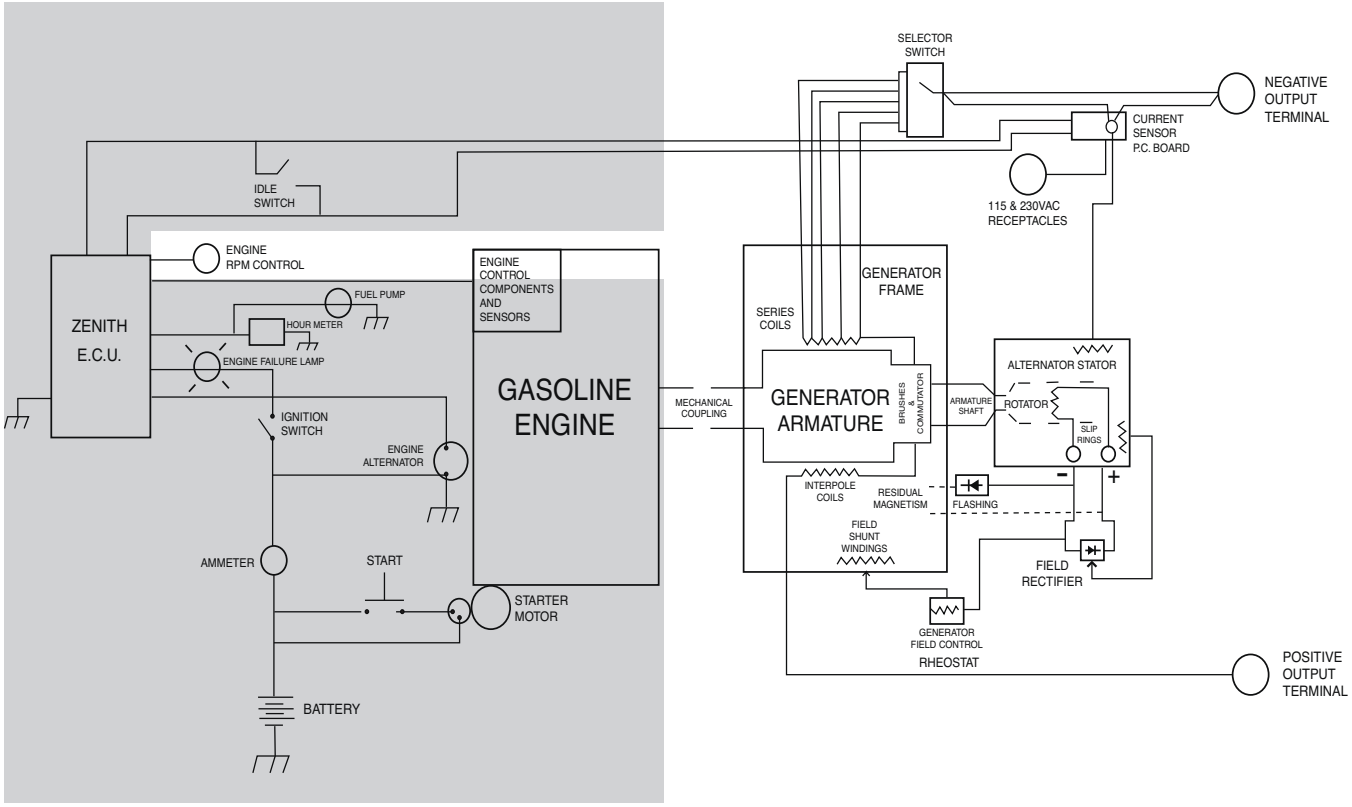

NOTE: Unshaded areas of Block Logic Diagram are the subject of discussion

ENGINE IDLER CIRCUIT

Classic® 300G (Codes 10659, 10912, and 11135)
The Zenith ECU used in the Classic® 300G controls whether the engine operates at high idle or low idle. Closing the circuit between pins #11 and #13 of the ECU signal that high RPM is required and the engine immediately accelerates to high idle RPM. Opening this will cause the engine RPM to drop to low idle speed, (about 1360 RPM) after a delay of about 15 seconds. If the pin #11 to pin #13 circuit is re-closed during this delay, engine RPM will remain high.

The current sensor PC board detects current flow in both the auxiliary and the weld circuits. When sufficient current is flowing in either of these circuits, the current sensor PC board closes the #11 - #13 circuit, when current flow ceases, the circuit is opened.

The idle switch and the current sensing PC board are wired in parallel across the #11 - #13 circuit described above. When the idle switch is set to the high position, the contacts are closed and the ECU operates the engine continuously at high RPM. When the idle switch is in the Auto position, the contacts are open, and the current sensor PC board has control of the #11 - #13 circuit.

Classic® 300D Perkins (Codes 10545, 10546, 10657, 10658, 10911, and 10927)
The above models use a high speed solenoid, connected to the governor linkage, and operated by the idler/engine protection PC board. In these machines, the solenoid increases the RPM when activated.

When the idle switch is in the auto position, and welding current is being drawn, the reed switch CR2 is closed. This signals the idler PC board to activate the high speed solenoid, which then increases the engine speed to high idle RPM. When auxiliary power is being used, the current is passed through the toroidal current transformer. This also signals the idler PC board to activate the high speed solenoid. When welding ceases or the auxiliary load is removed, a preset time delay of about 15 seconds starts. When this 15 second delay has passed, the idler PC board deactivates the high speed solenoid, and allows the machine will return to a low speed condition. If welding is resumed, or an auxiliary load is applied during this delay, the solenoid will remain active and the engine RPM remains high.

When the idle switch is in the high position, the reed switch CR2 is bypassed, signaling the PC board to activate the solenoid.

Classic® 300D Perkins (Codes 11110, 11111, 11248, 11249, 11280, 11281, 11411, 11412, 11472, and 11473)
The above models use a two winding idle solenoid, connected to the governor linkage, and operated by the idler/engine protection PC board. The engine normally runs at high RPM, and is controlled by the governor. When the idle switch is in the auto position and no weld or auxiliary loads are applied, the idler/engine protection PC board starts a 15 second delay. When this delay has passed, both the pull and hold coils of the solenoid are activated. After about 0.75 seconds, the pull coil is deactivated leaving the still active hold coil to maintain the low idle position of the solenoid.

NOTE: Unshaded areas of Block Logic Diagram are the subject of discussion

Return to Section TOC
Return to Master TOC

When the idle switch is in the auto position, and welding current is being drawn, the reed switch CR2 is closed. This signals the idler PC board to deactivate the idle solenoid, allowing the governor to increase the engine speed to high RPM. When auxiliary power is being used, the current is passed through the toroidal current transformer. This also signals the idler PC board to deactivate the idle solenoid. When welding ceases or the auxiliary load is removed, a preset time delay of about 15 seconds begins. When this 15 second delay has passed, the PC board activates the idle solenoid, as described above, and pulls the engine governor linkage to the low idle RPM position. If welding is resumed, or an auxiliary load is applied during this delay, the engine RPM will remain high.

When the idle switch is in the high position, the reed switch CR2 is bypassed, signaling the PC board to leave the solenoid inactive

Classic® 300D Kubota (Codes: 11112, 11113, 11243, 11244, 11413, 11414, 11474, and 11475)
The Kubota engine control unit (ECU) used in the Classic® 300D controls whether the engine operates at high idle or low idle. Grounding pin #31 of the ECU signals that high RPM is required and the engine immediately accelerates to high idle RPM. Opening the circuit between pin #31and chassis ground will cause the engine RPM to drop to low idle speed, after a delay of about 15 seconds. If the chassis ground to pin #31 circuit re-closed during this delay, engine RPM will remain high.

The current sensor PC board detects current flow in both the auxiliary and the weld circuits. When sufficient current is flowing in either of these circuits, the lead connected to pin #31 is grounded, signaling that high RPM is required. When current flow ceases, the lead connected to pin #31 is disconnected from chassis ground, and the engine idles down after the delay described above.

The idle switch and the current sensing PC board are wired in parallel between chassis ground and the pin#31 circuit described above. When the idle switch is set to the high position, the contacts are closed and the ECU operates the engine continuously at high RPM. When the idle switch is in the Auto position, the contacts are open, and the current sensor PC board controls whether the pin #31 circuit is grounded or open.

NOTE: Unshaded areas of Block Logic Diagram are the subject of discussion

Return to Section TOC
Return to Master TOC

FIGURE E.10 - DC GENERATOR MACHINES

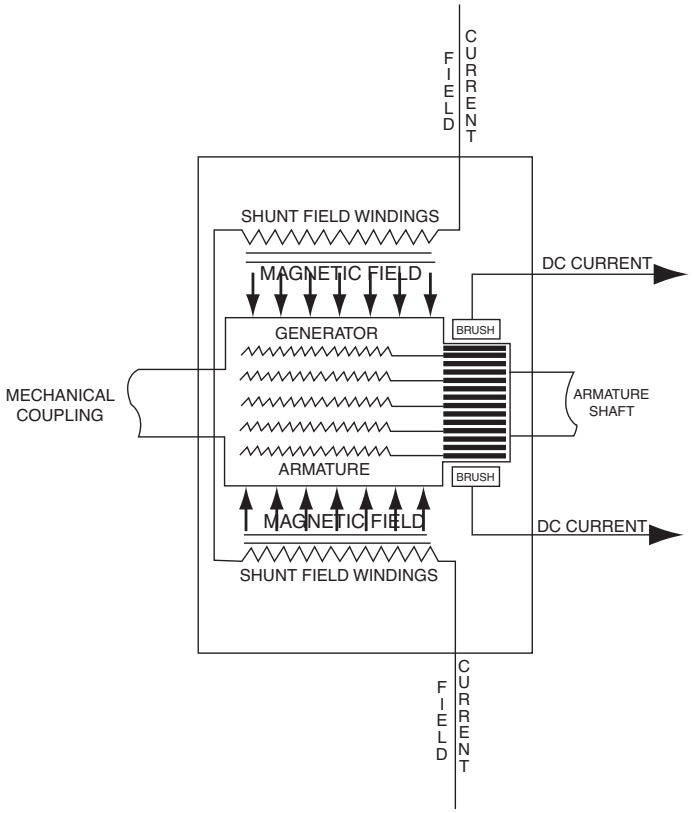

DC GENERATOR MACHINES

The armature winding of a DC generator is located on the rotating member. Current is conducted from it by means of carbon brushes. The field winding is located in the stator, which is stationary, and is excited by direct current. The armature coil sides are placed at opposite points on the rotating shaft with the conductors parallel to the shaft. The armature assembly is normally turned at a constant speed by a source of mechanical power connected to the shaft. Rotation of the armature through the magnetic field produced by the stationary field winding induces a coil voltage in the armature winding. The voltage induced in an individual armature coil is an alternating (AC) voltage, which must be rectified. In a conventional machine, rectification is provided mechanically by means of a commutator. A commutator is a cylinder formed of copper segments insulated from each other and mounted on, but insulated from, the rotating shaft. Each copper segment is connected to a corresponding armature winding. Stationary carbon brushes held against the commutator surface connect the armature windings to external terminals. The commutator provides full-wave rectification, transforming the voltage waveform between brushes and making available a DC voltage to the external circuit.

NOTE: Unshaded areas of Block Logic Diagram are the subject of discussion

Return to Section TOC
Return to Master TOC

NOTES

Return to Section TOC
Return to Master TOC
Return to Section TOC
Return to Master TOC
Return to Section TOC
Return to Master TOC

TABLE OF CONTENTS

Troubleshooting and Repair F-1

How to Use Troubleshooting Guide F-2
PC Board Troubleshooting Procedures F-3
Troubleshooting Guide F-4
Brush & Slip Ring Service Procedure F-23
Test Procedure F-25
Engine Alternator Test F-25
Engine Fuel System Voltage Test F-27
Engine Protection System Test F-29
Engine RPM Adjustment Test F-31
Flash Voltage Test F-35
Rocker Adjustment F-37
Exciter Rotor Resistance and Ground Test F-41
Shunt Field Coil Resistance and Ground Test F-45
Shunt Field Coil Voltage Test F-47
Exciter Stator Short Circuit and Ground Test F-49
Weld Circuit Ground and Short Circuit Test F-51
Welding Generator Brush & Commutation Inspection and Service F-53
Series Coil Short Circuit Test F-57
Voltage Waveforms F-59/F-61
Alternator Rotor Removal and Replacement F-63
Alternator Stator Removal and Replacement F-69
Generator Frame Removal and Replacement F-75
Generator Armature Removal and Replacement F-81
Retest and Repair F-83

Return to Master TOC
Return to Master TOC
Return to Master TOC
Return to Master TOC

HOW TO USE TROUBLESHOOTING GUIDE

⚠ WARNING

Service and Repair should only be performed by Lincoln Electric Factory Trained Personnel. Unauthorized repairs performed on this equipment may result in danger to the technician and machine operator and will invalidate your factory warranty. For your safety and to avoid Electrical Shock, please observe all safety notes and precautions detailed throughout this manual.

This Troubleshooting Guide is provided to help you locate and repair possible machine malfunctions. Simply follow the three-step procedure listed below.

Step 1. LOCATE PROBLEM (SYMPTOM).
Look under the column labeled "PROBLEM (SYMPTOMS)". This column describes possible symptoms that the machine may exhibit. Find the listing that best describes the symptom that the machine is exhibiting. Symptoms are grouped into the following categories: output problems, function problems and welding problems.

Step 2. PERFORM EXTERNAL TESTS.
The second column labeled "POSSIBLE AREAS OF MISADJUSTMENT(S)" lists the obvious external possibilities that may contribute to the machine symptom. Perform these tests/checks in the order listed. In general, these tests can be conducted without removing the case wrap-around cover.

Step 3. RECOMMENDED COURSE OF ACTION
The last column labeled "Recommended Course of Action" lists the most likely components that may have failed in your machine. It also specifies the appropriate test procedure to verify that the subject component is either good or bad. If there are a number of possible components, check the components in the order listed to eliminate one possibility at a time until you locate the cause of your problem.

All of the referenced test procedures referred to in the Troubleshooting Guide are described in detail at the end of this chapter. Refer to the Troubleshooting and Repair Table of Contents to locate each specific Test Procedure. All of the specified test points, components, terminal strips, etc. can be found on the referenced electrical wiring diagrams and schematics. Refer to the Electrical Diagrams Section Table of Contents to locate the appropriate diagram.

⚠ CAUTION

If for any reason you do not understand the test procedures or are unable to perform the tests/repairs safely, contact the Lincoln Electric Service Department for technical troubleshooting assistance before you proceed. Call 1-888-935-3877.

Return to Section TOC
Return to Master TOC

PC BOARD TROUBLESHOOTING PROCEDURES

⚠ WARNING

ELECTRIC SHOCK can kill.

- Have an electrician install and service this equipment. Turn the input power OFF at the fuse box before working on equipment. Do not touch electrically hot parts.

⚠ CAUTION

Sometimes machine failures appear to be due to PC board failures. These problems can sometimes be traced to poor electrical connections. To avoid problems when troubleshooting and replacing PC boards, please use the following procedure:

1. Determine to the best of your technical ability that the PC board is the most likely component causing the failure symptom.
2. Check for loose connections at the PC board to assure that the PC board is properly connected.
3. If the problem persists, replace the suspect PC board using standard practices to avoid static electrical damage and electrical shock. Read the warning inside the static resistant bag and perform the following procedures:

PC board can be damaged by static electricity.

ATTENTION Static-Sensitive Devices Handle only at Static-Safe Workstations

- Remove your body's static charge before opening the static-shielding bag. Wear an anti-static wrist strap. For safety, use a 1 Meg ohm resistive cord connected to a grounded part of the equipment frame.

- If you don't have a wrist strap, touch an un-painted, grounded, part of the equipment frame. Keep touching the frame to prevent static build-up. Be sure not to touch any electrically live parts at the same time.

- Tools which come in contact with the PC board must be either conductive, anti-static or static-dissipative.

- Remove the PC board from the static-shielding bag and place it directly into the equipment. Don't set the PC board on or near paper, plastic or cloth which could have a static charge. If the PC board can't be installed immediately, put it back in the static-shielding bag.

- If the PC board uses protective shorting jumpers, don't remove them until installation is complete.

- If you return a PC board to The Lincoln Electric Company for credit, it must be in the static-shielding bag. This will prevent further damage and allow proper failure analysis.

4. Test the machine to determine if the failure symptom has been corrected by the replacement PC board.

NOTE: It is desirable to have a spare (known good) PC board available for PC board troubleshooting.

NOTE: Allow the machine to heat up so that all electrical components can reach their operating temperature.

5. Remove the replacement PC board and substitute it with the original PC board to recreate the original problem.
   a. If the original problem does not reappear by substituting the original board, then the PC board was not the problem. Continue to look for bad connections in the control wiring harness, junction blocks, and terminal strips.
   b. If the original problem is recreated by the substitution of the original board, then the PC board was the problem. Reinstall the replacement PC board and test the machine.
6. Always indicate that this procedure was followed when warranty reports are to be submitted.

NOTE: Following this procedure and writing on the warranty report, "INSTALLED AND SWITCHED PC BOARDS TO VERIFY PROBLEM," will help avoid denial of legitimate PC board warranty claims.

Return to Section TOC
Return to Master TOC

Observe Safety Guidelines detailed in the beginning of this manual.

PROBLEMS (SYMPTOMS)	POSSIBLE AREAS OF MISADJUSTMENT(S)	RECOMMENDED COURSE OF ACTION
OUTPUT PROBLEMS		
Both the weld and auxiliary output voltages are low.	Make sure the engine is operating at high idle speed. Make sure that no load is connected to either the weld or auxiliary outputs.	Perform the ***Engine RPM Adjustment Test.*** Perform the ***Brush and Slip Ring Service Procedure.*** Perform the ***Flash Voltage test.*** Perform ***Exciter Rotor Resistance and Ground Test.***
There is no, or very low weld output, and no auxiliary output.	Check that the remote/local switch (if so equipped) is in the local control position. Check that the auxiliary power circuit breakers and Ground Fault Circuit Interrupters (GFCIs) (if so equipped) are not tripped. NOTE: GFCIs will not reliably reset, unless engine is operating at high idle RPM. Check all leads and cables for damaged or poor connections.	Perform the ***Brush and Slip Ring Service Procedure.*** Perform the ***Flash Voltage test.*** Perform the ***Exciter Rotor Resistance and Ground Test.***

⚠ CAUTION

If for any reason you do not understand the test procedures or are unable to perform the tests/repairs safely, contact the Lincoln Electric Service Department for technical troubleshooting assistance before you proceed. Call 1-888-935-3877.

Return to Section TOC
Return to Master TOC

Observe Safety Guidelines detailed in the beginning of this manual.

PROBLEMS (SYMPTOMS)	POSSIBLE AREAS OF MISADJUSTMENT(S)	RECOMMENDED COURSE OF ACTION
OUTPUT PROBLEMS		
There is no, or very low weld output voltage. The auxiliary output is normal.	Check that the remote/local switch (If so equipped) is positioned correctly. If a remote current control is being used, try switching to local control. The remote current control may be faulty. Check all leads and cables for damaged or poor connections.	Perform the ***Welding Generator Brush and Commutator Inspection and Service Procedure.*** Perform the ***Shunt Field Coil Resistance and Ground Test.*** Perform the ***Shunt Field Circuit Voltage Test.*** Check for damaged or poor connections at the brush holders, series and interpole coils, weld output terminals, and all the conductors connecting these components. The Armature may be faulty.
There is no auxiliary voltage, weld output is normal.	Check that the auxiliary power circuit breakers are not tripped. If the machine is equipped with a ground fault circuit interrupter (GFCI), it may be tripped. NOTE: GFCIs will not reliably reset, unless engine is operating at high idle RPM. Check all leads and cables for damaged or poor connections.	Check for auxiliary voltage at the receptacle input terminals, if normal voltage is present, replace receptacle. Check for auxiliary voltage at the connections closest to the exciter stator windings. See wiring diagram. • If normal voltage is present, check the wiring and circuit breakers between the test points and the receptacle. Repair or replace any defective parts or wiring. • If normal voltage is not present, check for damaged conductors between the test points and the winding. If the conductors are good, the stator is defective.

⚠ CAUTION

If for any reason you do not understand the test procedures or are unable to perform the tests/repairs safely, contact the Lincoln Electric Service Department for technical troubleshooting assistance before you proceed. Call 1-888-935-3877.

Return to Section TOC
Return to Master TOC

Observe Safety Guidelines detailed in the beginning of this manual.

PROBLEMS (SYMPTOMS)	POSSIBLE AREAS OF MISADJUSTMENT(S)	RECOMMENDED COURSE OF ACTION
OUTPUT PROBLEMS		
The output takes a long time to build up and the AC auxiliary voltage varies when the fine current control is adjusted.	N/A	Check the “flashing” diode located on the DC welding generator brush holder. The diode may be “shorted” or installed incorrectly.

⚠ CAUTION

If for any reason you do not understand the test procedures or are unable to perform the tests/repairs safely, contact the Lincoln Electric Service Department for technical troubleshooting assistance before you proceed. Call 1-888-935-3877.

Return to Section TOC
Return to Master TOC

Observe Safety Guidelines detailed in the beginning of this manual.

PROBLEMS (SYMPTOMS)	POSSIBLE AREAS OF MISADJUSTMENT(S)	RECOMMENDED COURSE OF ACTION
OUTPUT PROBLEMS		
The weld output is considerably less than indicated on the dials or varies abnormally. Auxiliary output appears normal.	Check welding cables for damaged or poor connections. Welding cable may be excessively long, too small, or coiled. Try using a set of short test cables of adequate size. If a remote current control is being used, try switching to local control. The remote current control may be faulty. The engine may not be maintaining steady RPM. Make sure there is an adequate supply of clean, fresh fuel. Replace fuel filters if necessary. Have engine serviced by a qualified engine technician.	Perform the ***Engine RPM Adjustment Test.*** Check the exciter brushes and, if necessary, perform the ***Exciter Brush and Slip Ring Service Procedure.*** Check the welding generator brushes and, if necessary, perform the ***Welding Generator Brush and Commutator Inspection and Service procedure.*** Check all the large weld current carrying leads inside the machine for damaged conductors, insulation, and poor connections. Check the wiring that connects the exciter, field bridge rectifier, rheostat, remote/local switch, and the shunt coils. Check for damaged conductors, insulation, and poor connections. Replace the Exciter Diode Bridge with a new or known good bridge. (Diode bridges will sometimes appear good under test, but fail while under a normal operating load.) Check the 64 Ohm fine current control rheostat, replace if necessary. Check remote/local switch. Replace if necessary. Perform the ***Exciter Rotor Resistance and Ground Test.***

⚠ CAUTION

If for any reason you do not understand the test procedures or are unable to perform the tests/repairs safely, contact the Lincoln Electric Service Department for technical troubleshooting assistance before you proceed. Call 1-888-935-3877.

Return to Section TOC
Return to Master TOC

Observe Safety Guidelines detailed in the beginning of this manual.

PROBLEMS (SYMPTOMS)	POSSIBLE AREAS OF MISADJUSTMENT(S)	RECOMMENDED COURSE OF ACTION
OUTPUT PROBLEMS		
The weld output is considerably less than indicated on the dials or varies abnormally. Auxiliary output appears normal. *(Continued)*	N/A	Perform the ***Shunt Field Coil Resistance and Ground Test.*** Check the Generator brush rocker position; perform the ***Rocker Adjustment Procedure*** if necessary.
The weld output is considerably higher than indicated on the dials. Auxiliary voltage appears normal.	If a remote current control is being used, try switching to local control. The remote current control may be faulty.	The engine RPM may be too high; perform the ***Engine RPM Adjustment Test.*** There may be a short circuit in the series field coils. Perform the ***Weld Circuit Ground and Short Circuit Test*** and ***Series Coil Short Circuit Test.*** Perform the ***Exciter Rotor Resistance and Ground Test.*** Perform the ***Shunt Field Coil Resistance and Ground Test.*** Verify that the rocker is positioned correctly, according to the factory drill mark. Perform the ***Rocker Adjustment Procedure*** if necessary.

⚠ CAUTION

If for any reason you do not understand the test procedures or are unable to perform the tests/repairs safely, contact the Lincoln Electric Service Department for technical troubleshooting assistance before you proceed. Call 1-888-935-3877.

Return to Section TOC
Return to Master TOC

Observe Safety Guidelines detailed in the beginning of this manual.

PROBLEMS (SYMPTOMS)	POSSIBLE AREAS OF MISADJUSTMENT(S)	RECOMMENDED COURSE OF ACTION
WELDING PROBLEMS		
The welding arc is loud and spatters excessively.	The weld current or voltage settings may be incorrect. The polarity may be incorrect for the process in use. If a remote current control is being used, try switching to local control. The remote current control may be faulty.	The engine RPM may be incorrect; perform the ***Engine RPM Adjustment Test.*** Check the exciter brushes and slip rings, and if necessary, perform the ***Brush and Slip Ring Service Procedure.*** Check the DC welding generator brushes and commutator. Perform the ***Welding Generator Brush and Commutator Inspection and Service Procedure.*** Replace the Exciter Diode Bridge with a new or known good bridge. (Diode bridges will sometimes appear good under test, but fail while under a normal operating load.) Perform the ***Exciter Rotor Resistance and Ground Test.*** Perform the ***Shunt Field Coil Resistance and Ground Test.*** Verify that the rocker is positioned correctly, according to the factory drill mark. Adjust the rocker position per the procedure in this manual.

⚠ CAUTION

If for any reason you do not understand the test procedures or are unable to perform the tests/repairs safely, contact the Lincoln Electric Service Department for technical troubleshooting assistance before you proceed. Call 1-888-935-3877.

Return to Section TOC
Return to Master TOC

Observe Safety Guidelines detailed in the beginning of this manual.

PROBLEMS (SYMPTOMS)	POSSIBLE AREAS OF MISADJUSTMENT(S)	RECOMMENDED COURSE OF ACTION
WELDING PROBLEMS		
The welding arc frequently "pops out". Welding heat seems normal and auxiliary output voltage appears normal.	The fine current control rheostat may be set too low. Try increasing the fine current control setting. Drop the range selector to a lower setting if arc is too hot. If a remote control is being used, try switching to local control. The remote control unit may be faulty. Check welding cables for damaged or poor connections. Welding cable may be excessively long, too small, or coiled. Try using a set of short test cables of adequate size.	The engine RPM may be incorrect; perform the ***Engine RPM Adjustment Test.*** Check the exciter brushes and slip rings. If necessary, perform the ***Brush and Slip Ring Service Procedure.*** Check the DC welding generator brushes and commutator. If necessary, perform the ***Welding Generator Brush and Commutator Inspection and Service procedure.*** Perform the ***Flash Voltage test.*** Perform the ***Shunt Field Circuit Voltage Test.*** Check that the rocker is aligned to the factory drill mark, and perform the ***Rocker Adjustment Procedure*** if necessary.

⚠ CAUTION

If for any reason you do not understand the test procedures or are unable to perform the tests/repairs safely, contact the Lincoln Electric Service Department for technical troubleshooting assistance before you proceed. Call 1-888-935-3877.

Return to Section TOC
Return to Master TOC

Observe Safety Guidelines detailed in the beginning of this manual.

PROBLEMS (SYMPTOMS)	POSSIBLE AREAS OF MISADJUSTMENT(S)	RECOMMENDED COURSE OF ACTION
WELDING PROBLEMS		
The engine will not crank when the start button is pressed. (Classic® 300G and 300D Perkins)	The battery may be discharged. Check, and if necessary, charge or replace the battery. The battery cables or battery connections may be loose or corroded. Service the battery terminals.	Make sure battery is fully charged and properly connected per the wiring diagram. Check for positive battery voltage where the lead from the start button connects to the starter solenoid, while holding in the start button. (Lead #84 on Classic® 300G, lead #52 on Classic® 300D Perkins) • If no voltage is present, check the connections and wiring connecting the starter solenoid, the ammeter, and the start push button switch. (See the wiring diagram) If the wiring and connections are good, replace the push button switch. • If voltage is present, check that the engine block is properly connected to the negative battery terminal. If the engine block is properly connected, the starter/solenoid is defective and should be serviced or replaced.

⚠ CAUTION

If for any reason you do not understand the test procedures or are unable to perform the tests/repairs safely, contact the Lincoln Electric Service Department for technical troubleshooting assistance before you proceed. Call 1-888-935-3877.

Return to Section TOC
Return to Master TOC

Observe Safety Guidelines detailed in the beginning of this manual.

PROBLEMS (SYMPTOMS)	POSSIBLE AREAS OF MISADJUSTMENT(S)	RECOMMENDED COURSE OF ACTION
FUNCTION PROBLEMS		
The engine will not crank when the start button is pressed. (Classic® 300D Kubota)	The battery may be discharged. Check, and if necessary, charge or replace the battery. The battery cables or battery connections may be loose or corroded. Service the battery terminals.	Make sure battery is fully charged and properly connected per the wiring diagram. Turn on the run/stop switch, and within 30 seconds, press the start button while checking for positive battery voltage where the lead #62 connects to the starter solenoid. • If voltage is present when the start button is pressed, check that the engine block is properly connected to the negative battery terminal. If the engine block is properly connected, the starter/solenoid is defective and should be serviced or replaced. • If no voltage is present: • Check the wiring connecting the starter solenoid, ammeter, start relay, and start button. See wiring diagram. • Check the start button. • Check for battery voltage at the start relay coil, between leads #212C(+) and lead #55(-) within 30 seconds of turning on the run/stop switch and while pressing the start button. • If voltage is present, replace the start relay. • If voltage is not present, check the #55 lead, all the conductors and devices between the #212C lead and the positive battery terminal.

⚠ CAUTION

If for any reason you do not understand the test procedures or are unable to perform the tests/repairs safely, contact the Lincoln Electric Service Department for technical troubleshooting assistance before you proceed. Call 1-888-935-3877.

Return to Section TOC
Return to Master TOC

Observe Safety Guidelines detailed in the beginning of this manual.

PROBLEMS (SYMPTOMS)	POSSIBLE AREAS OF MISADJUSTMENT(S)	RECOMMENDED COURSE OF ACTION
FUNCTION PROBLEMS		
The engine will not crank when the start button is pressed. (Classic® 300D Kubota) *(Continued)*		• Check that the Engine Control Module (ECU) is getting battery power and has a good ground connection (See wiring diagram) • Check lead #52B between the start button and the ECU. • Replace the ECU.
The engine cranks when the start button is pressed, but will not start. (Classic® 300G and Classic® 300D Perkins)	Make sure the run/stop switch is in the run position. The run/stop switch may have been left in the run position for more that 30 seconds (60 seconds for some models). Reset the engine protection system by moving the run/stop switch off, then on again. Check that the battery circuit breaker is not tripped. Check that there is an adequate supply of fresh clean fuel, and that the fuel shut-off valve is open. Check and if necessary, replace the fuel filter. (Classic® 300D Perkins only) If the machine is being used in a cold climate, the Glow Plugs may need to be used. See the welder operators' manual and the engine operator's manual for detailed instructions. (Classic® 300D Perkins only) There may be air in the fuel system. See the engine manufacturer's manual and bleed all air from the fuel system.	Perform the ***Engine Fuel System Voltage Tests.***

⚠ CAUTION

If for any reason you do not understand the test procedures or are unable to perform the tests/repairs safely, contact the Lincoln Electric Service Department for technical troubleshooting assistance before you proceed. Call 1-888-935-3877.

Return to Section TOC
Return to Master TOC

Observe Safety Guidelines detailed in the beginning of this manual.

PROBLEMS (SYMPTOMS)	POSSIBLE AREAS OF MISADJUSTMENT(S)	RECOMMENDED COURSE OF ACTION
FUNCTION PROBLEMS		
The engine cranks when the start button is pressed, but will not start. (Classic® 300D Kubota)	Make sure the run/stop switch is in the run position. The run/stop switch may have been left in the run position for more that 30 seconds (60 seconds for some models). Reset the engine protection system by moving the run/stop switch off, then on again. Check that there is an adequate supply of fresh clean fuel, and that the fuel shut-off valve is open. Check and if necessary, replace the fuel filter. If the machine is being used in a cold climate, the Glow Plugs may need to be used. See the welder operators' manual and the engine operator's manual for detailed instructions. There may be air in the fuel system. See the engine manufacturer's manual and bleed all air from the fuel system.	Verify that the engine control unit is getting battery power at pin #15, Lead 212D and a good chassis ground connection at pins #1 and #19. Check the wiring and connections between the engine control unit and the speed sensor, the water sensor and the actuator. If the control unit has power, a good chassis ground connection and the wiring described above is in good condition, the engine and engine control components should be checked by a qualified Kubota repair technician.

⚠ CAUTION

If for any reason you do not understand the test procedures or are unable to perform the tests/repairs safely, contact the Lincoln Electric Service Department for technical troubleshooting assistance before you proceed. Call 1-888-935-3877.

Return to Section TOC
Return to Master TOC

Observe Safety Guidelines detailed in the beginning of this manual.

PROBLEMS (SYMPTOMS)	POSSIBLE AREAS OF MISADJUSTMENT(S)	RECOMMENDED COURSE OF ACTION
FUNCTION PROBLEMS		
The engine starts normally, but shuts down after running for several seconds.	The oil pressure may be low. Check the oil level and add oil as needed. If necessary, contact the engine manufacturer, or a qualified engine specialist to determine the cause of the low oil pressure condition, and make any required adjustments or repairs. The engine alternator belt may be loose or broken. Replace the belt and/or adjust the belt tension. The engine may be overheated. Contact the engine manufacturer, or a qualified engine specialist to determine the cause of the overheat condition, and make any required adjustments or repairs.	The idle/engine protection PC board, engine control unit, alternator, oil pressure switch, or engine coolant temperature switch may be faulty. Perform the ***Engine Protection System Test***.
The engine will not develop full power.	Check that there is an adequate supply of fresh clean fuel, and that the fuel shut-off valve is fully open. Check the fuel and air filters, replace if necessary.	Perform the ***Engine RPM Adjustment Test***. There may be internal problems with the engine. Contact the engine manufacturer or a qualified engine repair technician.

⚠ CAUTION

If for any reason you do not understand the test procedures or are unable to perform the tests/repairs safely, contact the Lincoln Electric Service Department for technical troubleshooting assistance before you proceed. Call 1-888-935-3877.

Return to Section TOC
Return to Master TOC

Observe Safety Guidelines detailed in the beginning of this manual.

PROBLEMS (SYMPTOMS)	POSSIBLE AREAS OF MISADJUSTMENT(S)	RECOMMENDED COURSE OF ACTION
FUNCTION PROBLEMS		
The engine will not shut down when the run/stop switch is moved to the stop position.	N/A	Check the run/stop switch, replace if necessary. There may be a failure in the engine or engine control unit. Contact the engine manufacturer or a qualified engine technician.
The battery does not stay charged.	The battery may be faulty. Recharge and test the battery. Replace it if necessary. The engine alternator drive belt may be loose. Replace and/or adjust the belt tension.	Perform the ***Engine Alternator Test***.

⚠ CAUTION

If for any reason you do not understand the test procedures or are unable to perform the tests/repairs safely, contact the Lincoln Electric Service Department for technical troubleshooting assistance before you proceed. Call 1-888-935-3877.

Return to Section TOC
Return to Master TOC

Observe Safety Guidelines detailed in the beginning of this manual.

PROBLEMS (SYMPTOMS)	POSSIBLE AREAS OF MISADJUSTMENT(S)	RECOMMENDED COURSE OF ACTION
FUNCTION PROBLEMS		
The machine will not idle down to low RPM when weld and auxiliary loads are removed. The machine has normal weld and auxiliary output. The engine starts and shuts down normally.	Make sure the idle switch is in the "AUTO IDLE" position. Make sure there is no external load on the weld terminals or the auxiliary power receptacles. Disconnect the weld cables and unplug anything that may be connected to the auxiliary receptacles. For machines equipped with an idle solenoid, check for mechanical restrictions in the idler solenoid linkage.	Check the Idle Switch for proper operation. See wiring diagram. **Perkins powered units:** The idle solenoid linkage, if so equipped, may be bent or out of adjustment. Check that the linkage moves freely and that the plunger does not bind in any way. Check that the solenoid can freely pull in and solidly seat against its internal stop. The idle solenoid may have failed. Disconnect the solenoid leads and check the resistance of the solenoid coil. See machine schematic for correct solenoid coil resistance. Check the resistance from the solenoid leads to the solenoid body, resistance should be very high, 500,000 (500k) ohms minimum. Perform the ***Engine RPM Adjustment Test.*** The 2-CR Reed relay may be faulty. The reed relay should be electrically open if no current is flowing in the weld circuit. If there is continuity through the reed relay when the machine is off, it is defective and should be replaced. There may be voltage in the toroidal current sensor circuit. Unplug the current sensor from the PC board. See wiring diagram.

⚠ CAUTION

If for any reason you do not understand the test procedures or are unable to perform the tests/repairs safely, contact the Lincoln Electric Service Department for technical troubleshooting assistance before you proceed. Call 1-888-935-3877.

Return to Section TOC
Return to Master TOC

Observe Safety Guidelines detailed in the beginning of this manual.

PROBLEMS (SYMPTOMS)	POSSIBLE AREAS OF MISADJUSTMENT(S)	RECOMMENDED COURSE OF ACTION
FUNCTION PROBLEMS		
The machine will not idle down to low RPM when weld and auxiliary loads are removed. The machine has normal weld and auxiliary output. The engine starts and shuts down normally. *(Continued)*		If the machine idles down after the sensor is unplugged, check the wiring between the PC board and toroidal current sensor for damaged insulation and electrical contact with other electrically live components. (See the wiring diagram) If the wiring is good, there is likely a load on the auxiliary circuit. Check all wiring and components in the AC auxiliary circuit. (See wiring diagram) If the machine still will not idle down, check all wiring connected to the solenoid. See the wiring diagram. Look for damaged wiring, poor connections, dirty or corroded terminals, etc. If all of the wiring is good, replace the PC board. **For Classic® 300G and Kubota powered units:** Unplug the current sensor PC board. If the machine will not idle down, check all the wiring connecting to the current sensor. If all the wiring is good, replace the engine control unit. If the engine idles down when the sensor is disconnected, reconnect the sensor, then disconnect the leads that loop through the current sensor sensing unit. (See wiring diagram) If the engine does not idle down, replace the current sensor PC board.

⚠ CAUTION

If for any reason you do not understand the test procedures or are unable to perform the tests/repairs safely, contact the Lincoln Electric Service Department for technical troubleshooting assistance before you proceed. Call 1-888-935-3877.

Return to Section TOC
Return to Master TOC

Observe Safety Guidelines detailed in the beginning of this manual.

PROBLEMS (SYMPTOMS)	POSSIBLE AREAS OF MISADJUSTMENT(S)	RECOMMENDED COURSE OF ACTION
FUNCTION PROBLEMS		
The engine goes to low idle, but will not stay at low idle. The machine has normal weld and auxiliary output. The engine starts and shuts down normally.	Make sure there are no external loads on the weld terminals or the auxiliary power receptacles. Disconnect the weld cables and unplug anything that may be connected to the auxiliary receptacles.	The low idle RPM may be too low. Perform the engine idle adjustment procedure. The idle solenoid linkage may be out of adjustment. Check that the linkage moves freely and that the plunger is not binding in any way. Check that the solenoid can freely pull in and solidly seat against its internal stop. The idle solenoid may have failed. Disconnect the solenoid leads and check the resistance of the solenoid coil. See machine schematic for correct solenoid resistance. Check the solenoid for a grounded coil; the resistance between chassis ground and either solenoid lead wire should be 500k Ohms (500,000 Ohms) minimum. There may be a poor or intermittent connection in the solenoid wiring, or a component may be opening while under load. Check the idle switch and the wiring between the switch, the solenoid, and the PC Board. Repair or replace any poor connections, damaged wiring, or faulty components. (See wiring diagram) The idle/engine protection PC board may be faulty.

⚠ CAUTION

If for any reason you do not understand the test procedures or are unable to perform the tests/repairs safely, contact the Lincoln Electric Service Department for technical troubleshooting assistance before you proceed. Call 1-888-935-3877.

Return to Section TOC
Return to Master TOC

Observe Safety Guidelines detailed in the beginning of this manual.

PROBLEMS (SYMPTOMS)	POSSIBLE AREAS OF MISADJUSTMENT(S)	RECOMMENDED COURSE OF ACTION
FUNCTION PROBLEMS		
The engine goes to low idle, but will not stay at low idle. The machine has normal weld and auxiliary output. The engine starts and shuts down normally. *(Continued)*	N/A	**For Classic® 300G and Kubota powered Classic® 300D:** Check all wiring connecting the current sensor and the engine control unit. Unplug the current sensor. If the machine still will not stay at low idle, replace the engine control unit. If the machine goes to and maintains low idle RPM, reconnect the sensor and disconnect the wires passing through the sensing coil. If the problem persists, replace the current sensor PC board. If the problem is unchanged, check for current flowing in the LEDS that pass through the sensor.
The engine will not go to high idle when the idle switch is moved to the “High” position. The idle system functions normally while welding or using auxiliary power. The engine starts and shuts down normally.	N/A	The Idle switch may be defective. Wiring connecting the idle switch may be faulty. See Wiring Diagram.
The engine will not go to high idle when striking an arc or when using auxiliary power. The engine goes to high idle, and the weld and auxiliary power are normal when the idle switch is in the “High Idle” position. The engine starts, runs, and shuts down normally.	Check that the welding cables and the auxiliary power lead connections are tight and in good condition.	The idle/engine protection PC board may have failed. The current sensor PC board may have failed.

⚠ CAUTION

If for any reason you do not understand the test procedures or are unable to perform the tests/repairs safely, contact the Lincoln Electric Service Department for technical troubleshooting assistance before you proceed. Call 1-888-935-3877.

Return to Section TOC
Return to Master TOC

Observe Safety Guidelines detailed in the beginning of this manual.

PROBLEMS (SYMPTOMS)	POSSIBLE AREAS OF MISADJUSTMENT(S)	RECOMMENDED COURSE OF ACTION
FUNCTION PROBLEMS		
The engine will not go to high idle when striking an arc. The automatic idle system functions normally when using auxiliary power. Weld and auxiliary power are normal when the idle switch is in the "High Idle" position. The engine starts, runs, and shuts down normally.	Check that the welding cables, electrode holder, and work clamp are tight and in good condition. This may be normal operation if the machine has a Wire Feed Module, and is operating in CV mode. See the operator's manual for the Wire Feed Module.	**Perkins powered models:** The 2 CR Reed Relay, or the wiring that connect it to the PC board and chassis ground may be faulty. The Reed relay should close when sufficient current is drawn from the weld output terminals. The idle/engine protection PC board may be faulty. **Classic® 300G and Classic® 300D Kubota powered machines:** The weld current sense wire that passes through the current sensor may have a poor electrical connection. These leads are not numbered on Classic® 300G. on Kubota powered machines; these are leads 67A and 67B. Take these connections apart, clean them thoroughly and securely reconnect them. Check the condition of the crimp connections and replace any that are loose, corroded or suspect in any way.

⚠ CAUTION

If for any reason you do not understand the test procedures or are unable to perform the tests/repairs safely, contact the Lincoln Electric Service Department for technical troubleshooting assistance before you proceed. Call 1-888-935-3877.

Return to Section TOC
Return to Master TOC

Observe Safety Guidelines detailed in the beginning of this manual.

PROBLEMS (SYMPTOMS)	POSSIBLE AREAS OF MISADJUSTMENT(S)	RECOMMENDED COURSE OF ACTION
FUNCTION PROBLEMS		
The engine will not go to high idle when using auxiliary power. The automatic idle system functions normally when welding. Weld and auxiliary power is normal when the idle switch is in the “High Idle” position. The engine starts, runs, and shuts down normally.	The load applied to the auxiliary receptacles may be too low. A load of 150 Watts minimum is required for the idle system to operate reliably. Check that any power cords are in good condition and properly connected. Verify that any devices operating from the auxiliary AC power are operating correctly and are in good condition. Try plugging the device into another source of AC power to be sure it is functioning properly. Some devices may test the input power for correct voltage and frequency before they will operate. If such a device is being used, the idle switch will need to be placed in the “High” position. The current drawn by many of these devices, when testing the power, is too low to reliably activate the automatic idle system.	The Toroidal Current Transformer or the wiring connecting it to the idler/engine protection PC board may be faulty. The idler/engine protection PC board may be faulty.

⚠ CAUTION

If for any reason you do not understand the test procedures or are unable to perform the tests/repairs safely, contact the Lincoln Electric Service Department for technical troubleshooting assistance before you proceed. Call 1-888-935-3877.

Return to Section TOC
Return to Master TOC

BRUSH & SLIP RING SERVICE PROCEDURE
(Exciter/Auxiliary Power Alternator)

⚠ WARNING

Service and repair should be performed only by Lincoln Electric factory trained personnel. Unauthorized repairs performed on this equipment may result in danger to the technician or machine operator and will invalidate your factory warranty. For your safety and to avoid electrical shock, please observe all safety notes and precautions detailed throughout this manual.

If for any reason you do not understand the test procedures or are unable to perform the test/repairs safely, contact the Lincoln Electric Service Department for electrical troubleshooting assistance before you proceed. Call 1-888-935-3877.

PROCEDURE DESCRIPTION

This procedure provides guidance in testing and maintaining the brush and slip ring system of the Exciter/Auxiliary power alternator.

MATERIALS NEEDED

Miscellaneous Hand Tools
500 or 600 grit Emery Cloth
180 Sand Paper
220 or 320 grit commutator stone (Optional)

Return to Section TOC
Return to Master TOC

BRUSH & SLIP RING SERVICE PROCEDURE (continued)
(Exciter/Auxiliary Power Alternator)

PROCEDURE

1. Remove the round end cover from the exciter.
2. Examine brushes, slip rings and brush holder.
   - Brushes should be clean and free of oil and grease.
   - The brushes should be of sufficient length and have adequate spring tension. (Generally, the brushes should be replaced if either brush has less than 1/4" remaining before it reaches the end of it's travel.)
   - Brushes should be making good, continuous contact with the slip rings, and should be riding near the center of the slip rings. (The brush holder bracket may need to be slightly bent to achieve acceptable alignment.)

Note: If slip rings are very dark in color, display evidence of excessive arcing, or a have worn prematurely, these may be signs of a grounded or shorted rotor. Perform the ***Exciter Rotor Resistance and Ground Test***.

3. Check for evidence of sticking brushes. Sticking brushes will normally result in the slip rings being pitted and discolored from excessive arcing. Another sign of sticking brushes is instability or loss of both weld and auxiliary output, but the machine may begin to work properly for a short time after being jarred or moved. If there is any evidence that the brushes may have been sticking in the brush holders, a new brush holder and brush assembly should be installed.

Cleaning the Slip Rings

In the event that the slip rings become dirty, discolored or mildly pitted, it is necessary to clean them using a very fine 500 or 600 grit emery cloth.

⚠ CAUTION

A 220 or 320 grit commutator stone may be used.

Commutator stones should only be used by experienced technicians who have the knowledge and proper equipment to use them safely.

Seating Brushes

If brushes have been replaced, repositioned or are not making full contact with the slip rings, it will be necessary to re-seat them. This can be done by placing a strip of 180 grit sandpaper between the slip rings and the brushes. Make sure the abrasive side is against the brushes. Pull the strip around the circumference of the slip rings in the direction of the rotor rotation only. Repeat this procedure until the surface of each brush is in full contact with its matching slip ring.

Use low pressure compressed air to thoroughly blow the carbon, commutator stone and sandpaper dust from the machine before operating.

Securely connect the leads to the brush terminals (see wiring diagram) and replace the alternator cover if testing and service is complete.

Return to Section TOC
Return to Master TOC

ENGINE ALTERNATOR TEST PROCEDURE

⚠ WARNING

Service and repair should be performed only by Lincoln Electric factory trained personnel. Unauthorized repairs performed on this equipment may result in danger to the technician or machine operator and will invalidate your factory warranty. For your safety and to avoid electrical shock, please observe all safety notes and precautions detailed throughout this manual.

If for any reason you do not understand the test procedures or are unable to perform the test/repairs safely, contact the Lincoln Electric Service Department for electrical troubleshooting assistance before you proceed. Call 1-888-935-3877.

TEST DESCRIPTION

This test will determine if the engine alternator is operating normally.

MATERIALS NEEDED

Multimeter
Miscellaneous hand tools
Wiring diagram

Return to Section TOC
Return to Master TOC

ENGINE ALTERNATOR TEST PROCEDURE (continued)

PROCEDURE

1. Locate the engine alternator.

NOTE: Secure the door in the open position using the door restraint system. If the machine does not have a door restraint system, remove the door(s) or securely restrain them to prevent them from falling closed.

For Perkins powered machines:

Check voltage as follows:

Run/stop switch off:

Chassis ground to the B+ terminal of the alternator, the meter should read battery voltage.

Chassis ground to the alternator flash/sense lead, lead #59. The meter should read 0 volts.

Run/stop switch on:

Chassis ground to the flash/sense lead, lead #59. The meter should read about 12 Volts DC. If the engine is not started, this voltage will drop to zero after about 30 seconds. (This time may be 60 seconds on some models.)

Engine running:

Chassis ground to the B+ terminal of the alternator. The meter should read about 13.5 to 14.2 VDC.

Chassis ground to the alternator flash/sense lead. The meter should read about 10 Volts DC.

NOTE: A closed temperature switch or oil pressure switch can also cause the flash/sense voltage to measure low; perform the Engine Protection System test before replacing the alternator.

If the voltages are significantly different from those shown above, check the wiring connected to the alternator for faulty connections or bad insulation. If the wiring is good, the alternator is probably faulty and should be serviced or replaced.

For Kubota powered machines:

Check the wiring connecting the alternator to the ammeter, ignition switch, and engine control module.

If the wiring and connections are in good condition, the alternator and engine control unit should be checked by a qualified Kubota engine technician.

Return to Section TOC
Return to Master TOC

ENGINE FUEL SYSTEM VOLTAGE TEST PROCEDURE

⚠ WARNING

Service and repair should be performed only by Lincoln Electric factory trained personnel. Unauthorized repairs performed on this equipment may result in danger to the technician or machine operator and will invalidate your factory warranty. For your safety and to avoid electrical shock, please observe all safety notes and precautions detailed throughout this manual.

If for any reason you do not understand the test procedures or are unable to perform the test/repairs safely, contact the Lincoln Electric Service Department for electrical troubleshooting assistance before you proceed. Call 1-888-935-3877.

TEST DESCRIPTION

This test will determine if the fuel system is getting the electrical power needed to function correctly.

MATERIALS NEEDED

Miscellaneous hand tools
Multimeter

Return to Section TOC
Return to Master TOC

ENGINE FUEL SYSTEM VOLTAGE TEST PROCEDURE (continued)

PROCEDURE

1. Open and secure the side door.

NOTE: Secure the doors in the open position using the door restraint system. If the machine does not have a door restraint system, remove the doors or securely restrain them to prevent them from falling closed.

Perkins powered models:

Locate the fuel solenoid and attach a voltmeter to the leads. Turn on the run/stop switch. Within 30 seconds, read the voltage on the meter. The voltage should read about 12 VDC. Voltage should also be checked at the fuel pump for models that have one. See wiring diagram.

Note: The engine protection system will shut off the power to both the solenoid and the fuel pump if the engine is not started within about 30 seconds. Move the run/stop switch off then on again to reset.

If battery voltage is present at the solenoids and the fuel pump (If equipped), and the starter motor is cranking the engine normally, the problem is likely in the engine. Engine problems should be diagnosed and repaired by a qualified Perkins engine technician.

If battery voltage is not present, check for a tripped fuel system circuit breaker (Earlier units only)

Check the wiring and connections on the Idle/Engine protection PC board, the engine fuel system injection pump solenoid, the fuel pump (for engines having an electric fuel pump.), and chassis ground. Look for dirty, corroded, or damaged terminals, including the Molex terminals connecting the wiring to the PC board. Look for poor crimp connections and damaged wiring.

Check that the PC board is getting battery voltage from the run/stop switch and that it is securely grounded.

If the board is getting power, is properly grounded, and the wiring and connections described above is in good condition, replace the PC board.

Return to Section TOC
Return to Master TOC
Return to Section TOC
Return to Master TOC
Return to Section TOC
Return to Master TOC
Return to Section TOC
Return to Master TOC

ENGINE PROTECTION SYSTEM TEST PROCEDURE

⚠ WARNING

Service and repair should be performed only by Lincoln Electric factory trained personnel. Unauthorized repairs performed on this equipment may result in danger to the technician or machine operator and will invalidate your factory warranty. For your safety and to avoid electrical shock, please observe all safety notes and precautions detailed throughout this manual.

If for any reason you do not understand the test procedures or are unable to perform the test/repairs safely, contact the Lincoln Electric Service Department for electrical troubleshooting assistance before you proceed. Call 1-888-935-3877.

TEST DESCRIPTION

This test will help pinpoint a failure of the engine protection system and should be done if the engine fault light turns on and the engine shuts down shortly after startup, and the engine is not actually in a fault condition.

MATERIALS NEEDED

Miscellaneous hand tools
Multimeter
Wiring diagram

IMPORTANT

Before proceeding with this test, verify that the engine has normal oil pressure, is not overheated, and the alternator drive belt is in place and properly tensioned.

Return to Section TOC
Return to Master TOC

ENGINE PROTECTION SYSTEM TEST PROCEDURE (continued)

PROCEDURE

1. Open the side doors on the Classic® 300 machine.

NOTE: Secure the doors in the open position using the door restraint system. If the machine does not have a door restraint system, remove the doors or securely restrain them to prevent them from falling closed.

Classic® 300D Perkins powered machines:

⚠ CAUTION

The following procedure will temporarily disable the engine protection system. Be absolutely certain that engine temperature and oil pressure are within the normal range. **IF THE ENGINE IS PERMITTED TO RUN WHITE OVERHEATED OR WITH TOW OIL PRESSURE, SEVERE ENGINE DAMAGE WILL LIKELY RESULT, AND THE ENGINE WARRANTY WILL NOT COVER THE DAMAGE.** Be absolutely certain that all wires are connected when the test is completed.

2. Disconnect the lead wire connecting the PC board to the engine coolant temperature gage or switch. See wiring diagram.
3. Disconnect the lead wire connecting the PC board to the engine oil pressure switch.
4. Disconnect the flash/sense lead connecting the PC board to the engine alternator.
5. Insulate and/or position these leads so they cannot touch chassis ground, any other electrical conductor, or be damaged by any moving parts.
6. Start the engine and allow it to run.
7. If the engine still shuts down, thoroughly check the three wires that had been disconnected in steps 1 through 3. Be particularly aware of damaged insulation, or anything that may cause one of these conductors to come in contact with chassis ground.
8. If no problems are discovered with the wiring or insulation, the Idler/Engine shutdown PC board is faulty and should be replaced.
9. If the engine continues to run with these wires disconnected, one of the engine protections switches is faulty or the engine alternator is faulty.
10. Shut off the engine and reconnect any one of the three leads that had been disconnected in steps 1 through 3, then start the engine and allow it to run. If the engine shuts down, the component that had just been connected is faulty and should be repaired or replaced.
11. If the engine continues to run after reconnecting one of the wires, repeat step #9, connecting one of the two remaining wires, then repeat step #9 again connecting the last wire. Repair or replace any faulty component.

Be certain to reconnect all lead wires and close the doors when testing and service is complete.

Classic® 300D Kubota powered machines:

The Kubota engine control module will flash the engine protection fault light, indicating where the fault was detected. See the machine schematic for a list of codes. Use this code to determine what sensor or associated wiring is causing the problem and check the wiring.

The sensors and engine control unit are part of the Kubota engine. If the wiring and connections are in good condition, the engine should be serviced by a qualified Kubota service technician.

Return to Section TOC
Return to Master TOC

ENGINE RPM ADJUSTMENT TEST PROCEDURE

⚠ WARNING

Service and repair should be performed only by Lincoln Electric factory trained personnel. Unauthorized repairs performed on this equipment may result in danger to the technician or machine operator and will invalidate your factory warranty. For your safety and to avoid electrical shock, please observe all safety notes and precautions detailed throughout this manual.

If for any reason you do not understand the test procedures or are unable to perform the test/repairs safely, contact the Lincoln Electric Service Department for electrical troubleshooting assistance before you proceed. Call 1-888-935-3877.

TEST DESCRIPTION

This test will determine if the engine is operating at the correct RPM, for both high and low idle positions.

MATERIALS NEEDED

Miscellaneous hand tools
Strobe tachometer
Frequency counter or Multimeter with frequency counter function
Bright colored marking pencil or marker

Note: The engine RPM on the Classic® 300G and 300D with the Kubota engine is not adjustable. The electronic modules on these machines maintain RPM based on internal programming and the position of the RPM adjustment potentiometer or "Custom Arc" control. ***RPM should still be checked to determine if these systems are functioning correctly.***

Return to Section TOC
Return to Master TOC

ENGINE RPM ADJUSTMENT TEST PROCEDURE (continued)

PROCEDURE

1. Turn the engine off.
2. Place the RPM adjustment potentiometer or "Custom Arc" control to maximum (Classic® 300G and Classic® 300D Kubota models only.)
3. Open the side door.

NOTE: Secure the door in the open position using the door restraint system. If the machine does not have a door restraint system, remove the door or securely restrain it to prevent it from falling closed.

Classic® 300D Perkins only:

Check that the linkage attaching the solenoid to the engine speed control lever is properly aligned and in good condition.

Strobe-Tach Method:

Place a highly visible mark on the engine crankshaft pulley, or another rotating component connected to the engine crankshaft.

Connect the strobe-tach according to the manufacturer's instructions.

Start the engine and place the idle switch in the "HIGH IDLE" position. Make sure that there is no load on the machine and allow the engine RPM to stabilize.

Direct the strobe-tach light on the highly visible mark that had been applied earlier and synchronize the light with the rotating mark. See the strobe-tach manufacturer's instructions.

The tach should read between 1790 and 1810 RPM

Move the idle switch to the "AUTO IDLE" position and wait for the engine RPM to drop and stabilize at the low idle RPM.

Synchronize the strobe-tach to read the low idle RPM.

The tach should read as follows:

- 1325 to 1475 for Classic® 300G and Classic® 300Ds powered by the Perkins 104.22 engines.
- 1350 to 1450 for Classic® 300Ds powered by other Perkins engines
- 1390 to 1410 for Classic® 300D Kubota models.

If either of the readings is incorrect, proceed to the "***ENGINE RPM ADJUSTMENT PROCEDURE***" later in this section.

Frequency counter method:

NOTE: A dedicated frequency counter can be used for this test, but many high quality digital multimeters also have this function, and can be easily utilized. See the manufacturer's instructions for your frequency counter or multimeter.

Set your frequency counter per the meter manufacturer's instructions, and plug the probes into one of the 120VAC auxiliary receptacles.

Start the engine and place the idle switch in the "HIGH IDLE" position. Make sure that there is no load on the machine and allow the engine RPM to stabilize.

The frequency should read between 59.7 and 60.3 Hz.

Move the idle switch to the "AUTO IDLE" position and wait for the engine RPM to drop and stabilize at the low idle RPM.

The frequency counter should read as follows:

- 44.2 to 49.2 Hz. for Classic® 300G and Classic® 300Ds powered by the Perkins 104.22 engines.
- 45 to 48.3 Hz. for Classic® 300Ds powered by other Perkins engines
- 46.3 to 47 Hz. for Classic® 300D Kubota models.

If either of the readings is incorrect, proceed to the "***ENGINE RPM ADJUSTMENT PROCEDURE***" later in this section.

NOTE: For Lincoln Electric 1800 RPM (4 Pole) machines, that have 60 Hz AC auxiliary power; the engine RPM can be determined by multiplying the frequency of the auxiliary power output, in Hz. By 30. (Example: 60 Hz. * 30 = 1800 RPM)

Return to Section TOC
Return to Master TOC

ENGINE RPM ADJUSTMENT TEST PROCEDURE (continued)

ENGINE RPM ADJUSTMENT PROCEDURE

Classic® 300G and Classic® 300D (Kubota) have electronic engine RPM control. Both high and low RPM are programmed into the engine control module and cannot be adjusted.

High Idle Adjustment:

IMPORTANT: For codes: 11110, 11111, 11248, 11249, 11280, 11281, 11411, 11412, 11472, and 11473 The high idle RPM is set by the engine manufacturer, and should not be changed. If the high idle RPM is not within the specified range, the engine should be serviced by a qualified engine technician.

For codes: 10545, 10546, 10657, 10658, 10911, and 10927 the high speed solenoid linkage rod must be lengthened or shortened to obtain the specified RPM.

IMPORTANT: The solenoid must pull firmly against its internal stop. The maximum RPM stop screw on the engine should not be adjusted. If the high idle RPM cannot be set by adjusting only the solenoid linkage rod, the engine should be serviced by a qualified engine technician.

Low idle adjustment:

For codes: 11110, 11111, 11248, 11249, 11280, 11281, 11411, 11412, 11472, and 11473, the idle solenoid linkage rod must be lengthened or shortened to obtain the specified RPM.

IMPORTANT: The solenoid must pull firmly against its internal stop.

For codes: 10545, 10546, 10657, 10658, 10911, and 10927, the low idle RPM is set using the low RPM adjustment screw on the engine.

Return to Section TOC
Return to Master TOC

NOTES

Return to Section TOC
Return to Master TOC
Return to Section TOC
Return to Master TOC
Return to Section TOC
Return to Master TOC

FLASHING VOLTAGE TEST PROCEDURE

⚠ WARNING

Service and repair should be performed only by Lincoln Electric factory trained personnel. Unauthorized repairs performed on this equipment may result in danger to the technician or machine operator and will invalidate your factory warranty. For your safety and to avoid electrical shock, please observe all safety notes and precautions detailed throughout this manual.

If for any reason you do not understand the test procedures or are unable to perform the test/repairs safely, contact the Lincoln Electric Service Department for electrical troubleshooting assistance before you proceed. Call 1-888-935-3877.

TEST DESCRIPTION

This test checks the exciter rotor flashing voltage.

MATERIALS NEEDED

Miscellaneous hand tools
Multimeter
Wiring diagram

Return to Section TOC
Return to Master TOC
Return to Section TOC
Return to Master TOC
Return to Section TOC
Return to Master TOC
Return to Section TOC
Return to Master TOC

FLASHING VOLTAGE TEST PROCEDURE (continued)

PROCEDURE

1. Remove the cover from the exciter / auxiliary power alternator.
2. Connect the volt meter probes to the brush terminals. See the wiring diagram.
3. Remove one of the AC input leads from the field bridge rectifier.
4. Set the idle switch to "HIGH" and the RUN/STOP switch to "RUN", and start the engine.

NOTE: The meter should read about 4 to 6 VDC. If this voltage reading is correct, the test is complete. If the voltage measures zero or significantly lower than specified check for the following:

- An open flashing diode.
- A poor connection in the flashing circuit.
- Polarity of the main generator may be reversed.
- The rotor winding maybe shorted,
- The field bridge rectifier may be shorted.

5. Reconnect the AC lead to the Field Bridge.
6. With the engine running at High speed, the normal rotor voltage is 123 to 133VDC.

Return to Section TOC
Return to Master TOC

ROCKER ADJUSTMENT PROCEDURE

⚠ WARNING

Service and repair should be performed only by Lincoln Electric factory trained personnel. Unauthorized repairs performed on this equipment may result in danger to the technician or machine operator and will invalidate your factory warranty. For your safety and to avoid electrical shock, please observe all safety notes and precautions detailed throughout this manual.

If for any reason you do not understand the test procedures or are unable to perform the test/repairs safely, contact the Lincoln Electric Service Department for electrical troubleshooting assistance before you proceed. Call 1-888-935-3877.

TEST DESCRIPTION

The rocker is the part of the welding generator that supports and positions the 4 sets of brushes. Its position can be adjusted to fine tune the weld output and influence the weld characteristics.

Important: The rocker is set at the factory for the best overall performance and long generator and brush life. Altering this adjustment is normally not recommended unless one or more of the welding generator components affecting this setting have been replaced. In very unusual situations, very small adjustments of the rocker may be beneficial if the machine is operating within the specified limits, but the Arc characteristics are unsatisfactory for the desired application.

CAUTION: Improper rocker adjustment can result in poor performance, reduced brush life and damage to the welding generator. This adjustment should only be attempted by an experienced professional.

MATERIALS NEEDED

Resistive load bank, capable of accepting at least a 300 Amp load at 33 VDC.

Volt meter/Ammeter, able to read at least 300 Amps

Miscellaneous hand tools

Drill with 1/8" bit Tachometer or frequency meter.

Return to Section TOC
Return to Master TOC

ROCKER ADJUSTMENT PROCEDURE (continued)

FIGURE F.1 – FACTORY SET POINT DRILL MARK LOCATIONS

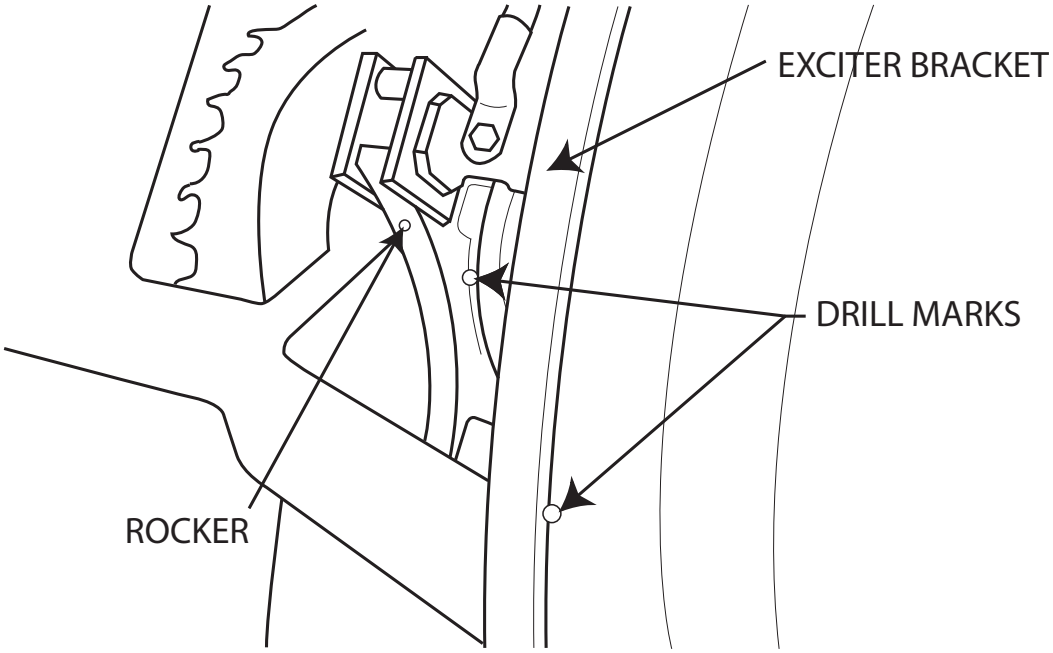

PROCEDURE

When the rocker is set for the first time at the factory, a 1/8" drill is used to mark the position of both the rocker and the exciter bracket. See Figure F.1

If a machine is not operating within the specified limits, and nothing else appears to be faulty, the rocker position should be checked. If the drill marks are not aligned, the rocker and/or the exciter bracket should be reset to the original factory position.

If it has been determined that a rocker adjustment is necessary on an unaltered machine; the rocker should only be moved in very small increments, and the total movement should be no more than 1/2 the diameter of the drill mark.

IMPORTANT! The following procedures should only be attempted if all the other systems have been thoroughly checked and are functioning normally.

Setting the rocker if the factory drill mark is missing or invalid due to component replacement:

A tachometer will be required for this phase of the test. See The ***Engine RPM Adjustment Test*** for details about measuring engine RPM.

Initial rocker placement:

The rocker should be initially positioned so the center of brushes visually lines up with the center of the main poles. Lining up the four brush holder studs with the four exciter bracket mounting bolts is acceptable for initial placement. The rocker should be tight against the shoulder of the hub and the clamping screw should be tightened only enough to assure the rocker cannot move. **DO NOT OVER TIGHTEN.**

IMPORTANT: Over tightening the rocker clamp screw can destroy the rocker.

Return to Section TOC
Return to Master TOC

ROCKER ADJUSTMENT PROCEDURE (continued)

Check that the brush holders are properly installed and positioned correctly. See the ***Welding Generator Brush and Commutator Inspection and Service procedure.***

Start the engine, place the idle switch in the high idle position, and seat the brushes using a commutator stone. See the ***Welding Generator Brush and Commutator Inspection and Service Procedure.***

Place the range selector switch in the maximum position. Use a load bank to apply a 100% duty cycle load (250 amps @ 30 volts). Look at the brushes while the load is applied. If excessive sparking is observed, adjust the rocker position to minimize sparking. Generally, moving the rocker slightly in the direction of the armature rotation will reduce sparking.

Continue running the machine under load for at least 30 minutes to bring the machine up to normal operating temperature and to fully seat the brushes.

Check for Max output.

Remove the load, set the fine current control and rheostat to maximum, and then adjust the load bank to apply a 300 Amp load to the machine.

Measure the output voltage, it should read:

- From 33 to 42 VDC for Classic® 3000 and Classic® 300D Perkins models.
- From 34 to 48 VDC for Classic® 300D Kubota models.

Measure the engine RPM, it should measure:

- From 1780 to 1810 RPM, for Classic® 3000 models
- From 1650 to 1750 RPM, for Classic® 300D Perkins models
- From 1790 to 1810 RPM, for Classic® 300D Kubota models

If the engine RPM is not within specification, Perform the ***Engine RPM Adjustment Test,*** if the engine high idle RPM is normal, but the load RPM is significantly less than specified above, the engine or governor may be malfunctioning. See the engine troubleshooting procedures in this manual and/or have the engine serviced or repaired by a qualified engine technician.

If the weld output voltage is lower than specified above, the rocker position will need to be adjusted. Generally, moving the rocker opposite the armature rotation direction will increase output voltage. When making this adjustment, the rocker should only be moved in very small increments. The adjustment may need to be repeated several times to achieve the desired result.

Check the OCV, (Open Circuit Voltage)

Remove the load and check the voltage at the output studs. The voltage should measure from 93 to 99 Volts DC.

After the rocker has been adjusted and the machine is operating normally, the rocker locking screw should be tightened to 70-75 Inch-Lbs.

If new parts had been installed, the new rocker and/or exciter bracket location should be marked with a 1/8" drill mark. ***See Figure F.1.***

Return to Section TOC
Return to Master TOC

NOTES

Return to Section TOC
Return to Master TOC
Return to Section TOC
Return to Master TOC
Return to Section TOC
Return to Master TOC

EXCITER ROTOR RESISTANCE AND GROUND TESTS PROCEDURE (Exciter / Auxiliary Power Alternator)

⚠ WARNING

Service and repair should be performed only by Lincoln Electric factory trained personnel. Unauthorized repairs performed on this equipment may result in danger to the technician or machine operator and will invalidate your factory warranty. For your safety and to avoid electrical shock, please observe all safety notes and precautions detailed throughout this manual.

If for any reason you do not understand the test procedures or are unable to perform the test/repairs safely, contact the Lincoln Electric Service Department for electrical troubleshooting assistance before you proceed. Call 1-888-935-3877.

TEST DESCRIPTION

This test will determine if the exciter / auxiliary power alternator rotor winding is open, shorted, or grounded.

MATERIALS NEEDED

Miscellaneous hand tools
Ohmmeter (Analog type meter required for dynamic resistance test.)
Wiring diagram

Return to Section TOC
Return to Master TOC

EXCITER ROTOR RESISTANCE AND GROUND TESTS PROCEDURE (Exciter / Auxiliary Power Alternator) (continued)

FIGURE F.2 – LEAD LOCATION

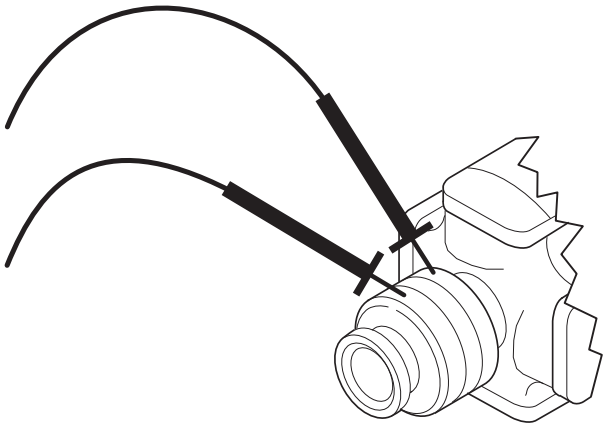

PROCEDURE

"Static" Tests:

1. Turn the engine off.
2. Remove the round cover from the exciter / auxiliary power alternator.
3. Locate and label the leads connected to the rotor brush holder assembly. Remove the leads. This will electrically isolate the rotor windings.
4. Using the ohmmeter, check the rotor winding resistance across the slip rings. Normal resistance is approximately 41.5* ohms, at 77°F. (25° C.) See Figure F.2
5. Measure the resistance to ground. Place one meter probe on either of the slip rings. Place the other probe on any good unpainted chassis ground. The resistance should be very high, at least 500,000 (500k) ohms.
6. If the resistance measurements are not as specified the rotor may be faulty and should be replaced.

If these resistance values are normal, continue testing, using the dynamic rotor resistance and ground test.

"Dynamic" Tests:

(Also referred to as flying resistance test)

This test checks for faults in the rotor winding, while these windings are being stressed by the mechanical forces encountered during normal operation.

NOTE: This test is best performed with a good quality analog type ohmmeter. Many digital meters will not provide stable or accurate resistance readings while the rotor is spinning.

This test requires that the brushes and slip rings are clean, in good condition, and are properly seated.

Perform the ***Brush and Slip RIng Service Procedure*** if necessary.

Return to Section TOC
Return to Master TOC

EXCITER ROTOR RESISTANCE AND GROUND TESTS PROCEDURE (Exciter / Auxiliary Power Alternator) (continued)

7. Insulate the lead wires that had been disconnected from the brushes during the static rotor resistance test. Position and secure them so they cannot become damaged by the spinning rotor. It is recommended that the ohmmeter leads be securely attached to the brush terminals, using clips or terminals BEFORE starting the engine.
8. Start the engine and run it at high idle speed (1800 RPM). The resistance should read approximately 42* ohms at 77°F (25°C).
9. Shut off engine, and move one of the ohmmeter leads to a good clean chassis ground connection.
10. Restart the engine and run it at high idle speed (1800 RPM). The resistance should be very high, at least 500,000 (500k) ohms.
11. If the resistance readings differ significantly from the values indicated, recheck the brushes and the brush spring tension. If the brushes and slip rings are good, replace the rotor.
12. Securely connect the leads to the brush terminals (see wiring Diagram) and replace the alternator cover if testing and service is complete.

**NOTE: The resistance of the copper windings will change with temperature. Higher temperatures will produce higher resistance, and lower temperatures will produce lower resistance.*

Return to Section TOC
Return to Master TOC

NOTES

Return to Section TOC
Return to Master TOC
Return to Section TOC
Return to Master TOC
Return to Section TOC
Return to Master TOC

SHUNT FIELD COIL RESISTANCE AND GROUND TEST PROCEDURE

⚠ WARNING

Service and repair should be performed only by Lincoln Electric factory trained personnel. Unauthorized repairs performed on this equipment may result in danger to the technician or machine operator and will invalidate your factory warranty. For your safety and to avoid electrical shock, please observe all safety notes and precautions detailed throughout this manual.

If for any reason you do not understand the test procedures or are unable to perform the test/repairs safely, contact the Lincoln Electric Service Department for electrical troubleshooting assistance before you proceed. Call 1-888-935-3877.

TEST DESCRIPTION

This procedure will determine if the welding generator shunt field coils are open, shorted or grounded.

Important: The machine should be clean and windings must be completely dry before this test is done.

MATERIALS NEEDED

Miscellaneous hand tools
Multimeter
Wiring diagram

Return to Section TOC
Return to Master TOC

SHUNT FIELD COIL RESISTANCE AND GROUND TEST PROCEDURE (continued)

PROCEDURE

1. Turn the engine off.
2. Open either or both of the doors on the machine.

NOTE: Secure the doors in the open position using the door restraint system. If the machine does not have a door restraint system, remove the doors or securely restrain them to prevent them from falling closed.

Test the shunt coil resistance:

3. Remove the jumper plug or wire feed module harness plug from J5. Locate the brown and blue wires in J5, (pin numbers 3 and 5). Check the resistance between these two leads. Resistance should measure about 59 ohms at 77°F. (25° C.)

NOTE: It is always best to place probes in the lead end of Molex connectors. Molex pins can be easily damaged if probes are inserted in the connection pin end.

4. If the resistance reading is correct, proceed to the ***Shunt Field Coil Resistance and Ground Test***
5. If the resistance is significantly higher than 59* ohms, check the wiring between the test points and the shunt coils. Check the lead wire connecting the two shunt coils together inside the generator frame. See the wiring diagram and the internal generator diagram. If these lead wires and connections are undamaged, one of the coils is likely open. Replace the shunt field coil set.
6. If the resistance is significantly lower than 59* Ohms, check the wiring between the test points and the coils for damaged insulation, pinched wires, etc. If the lead wires and insulation are in good condition, replace the shunt coil set.

Shunt coil ground test:

7. With the jumper plug or wire feed module unplugged from J5, measure the resistance between either the brown or blue wires and a good clean chassis ground. The resistance should be very high, 500,000 (500k) Ohms minimum.
8. If the resistance is still lower than 500,000 (500k) Ohms, check the shunt coil lead wires between the test points and the coils. Also check the lead wire connecting the two shunt coils together inside of the generator. Look for pinched wires and damaged insulation. If the low resistance is determined to be between chassis wound and one of the shunt coils, replace the coil set.
9. Reconnect the wires and replace any covers that have been removed.

**NOTE: The resistance in the copper windings will change with temperature. Higher temperatures will produce slightly higher resistance, and lower temperatures will produce slightly lower resistance.*

Return to Section TOC
Return to Master TOC

SHUNT FIELD CIRCUIT VOLTAGE TEST PROCEDURE

⚠ WARNING

Service and repair should be performed only by Lincoln Electric factory trained personnel. Unauthorized repairs performed on this equipment may result in danger to the technician or machine operator and will invalidate your factory warranty. For your safety and to avoid electrical shock, please observe all safety notes and precautions detailed throughout this manual.

If for any reason you do not understand the test procedures or are unable to perform the test/repairs safely, contact the Lincoln Electric Service Department for electrical troubleshooting assistance before you proceed. Call 1-888-935-3877.

TEST DESCRIPTION

This procedure will determine if the shunt field coils are receiving the necessary power to operate correctly.

This test should be done if there is little or no output from the welding generator, but auxiliary output is normal.

MATERIALS NEEDED

Miscellaneous hand tools
Multimeter
Wiring diagram

Return to Section TOC
Return to Master TOC

SHUNT FIELD CIRCUIT VOLTAGE TEST PROCEDURE (continued)

PROCEDURE

1. Turn the engine off.
2. Open either or both of the side doors.

NOTE: Secure the doors in the open position using the door restraint system. If the machine does not have a door restraint system, remove the doors or securely restrain them to prevent them from falling closed.

3. Place the field rheostat in the maximum position.
4. Place the remote/local switch in the local position.
5. Place the idle switch in the high idle position, start the engine and allow it to stabilize at high idle RPM.
6. Locate the J5 Molex connector located in the harness close to the generator lead block.
7. Test for DC voltage between the brown and blue wires, pins #3 and #5. The voltage should be between 123 and 133 VDC.
8. If the measured voltage is normal, but there is still no usable output from the welding generator, perform the ***Shunt Field Coil Resistance and Ground Test.***
9. If the correct voltage is not present at the J5 harness plug, check for voltage at the positive and negative terminals of the field bridge rectifier. See Wiring Diagram.
10. If 123 to 133 VDC is present at the field bridge rectifier, check the wiring and connections between the rectifier, the rheostat, the remote/local switch, and the J5 Molex connector. Check the rheostat and the remote/local switch for proper operation. See Wiring Diagram.

Return to Section TOC
Return to Master TOC

EXCITER STATOR SHORT CIRCUIT & GROUND TEST PROCEDURE

⚠ WARNING

Service and repair should be performed only by Lincoln Electric factory trained personnel. Unauthorized repairs performed on this equipment may result in danger to the technician or machine operator and will invalidate your factory warranty. For your safety and to avoid electrical shock, please observe all safety notes and precautions detailed throughout this manual.

If for any reason you do not understand the test procedures or are unable to perform the test/repairs safely, contact the Lincoln Electric Service Department for electrical troubleshooting assistance before you proceed. Call 1-888-935-3877.

TEST DESCRIPTION

This test will determine if there are undesirable electrical connections between the exciter stator windings and chassis ground, or between individual windings within the exciter stator.

This test should be performed if flashing voltage is present at the rotor slip rings, rotor resistance, the D1 field bridge rectifier, and all associated wiring are proven to be good, but the exciter stator output voltage fails to build-up to normal levels, or is too high in one or more of the windings.

MATERIALS NEEDED

Miscellaneous hand tools
Multimeter

Return to Section TOC
Return to Master TOC

EXCITER STATOR SHORT CIRCUIT & GROUND TEST PROCEDURE (continued)

PROCEDURE

1. Open either, or both of the side doors.

Note: Secure the doors in the open position using the door restraint system. If the machine does not have a door restraint system, remove the doors or securely restrain them to prevent them from falling closed.

2. Make sure that nothing is plugged into the auxiliary receptacles.
3. Disconnect and isolate the ground lead connected to the neutral side of the 115 VAC auxiliary receptacle. See the wiring diagram.
4. Disconnect and isolate the exciter winding leads. (Leads 214 and 215) In earlier codes, these wires were color coded yellow and did not have numbers. See the wiring diagram.
5. Using an ohmmeter; check the resistance between the following points. Resistance should read very high, 500,000 (500k) ohms minimum.

- From chassis ground and one of the exciter winding leads.
- From chassis ground and one of the neutral terminals of the 115 VAC receptacle. (The neutral terminal is the longer of the two slots.)
- From one of the neutral terminals of the 115 VAC receptacle to one of the exciter leads.

6. If any of these readings are less than 500,000 (500k) ohms, be certain that the windings are completely dry and check for grounded components or wiring that remain connected to the stator, such as circuit breakers, receptacles, etc. See wiring diagram. If necessary, disconnect and isolate the stator leads as close to the stator winding as possible.
7. If the low resistance to ground, or between individual stator windings is determined to be within the stator, the stator is defective and should be replaced.

Return to Section TOC
Return to Master TOC

WELD CIRCUIT GROUND AND SHORT CIRCUIT TEST PROCEDURE

⚠ WARNING

Service and repair should be performed only by Lincoln Electric factory trained personnel. Unauthorized repairs performed on this equipment may result in danger to the technician or machine operator and will invalidate your factory warranty. For your safety and to avoid electrical shock, please observe all safety notes and precautions detailed throughout this manual.

If for any reason you do not understand the test procedures or are unable to perform the test/repairs safely, contact the Lincoln Electric Service Department for electrical troubleshooting assistance before you proceed. Call 1-888-935-3877.

TEST DESCRIPTION

This procedure checks for grounded components in the weld circuit. It also checks for a short circuit condition between the positive and negative components of the weld circuit. This test cannot detect a short circuit within the armature or a turn to turn short circuit within a coil or coil set.

Important: The machine must be clean and completely dry before this test is done.

MATERIALS NEEDED

Miscellaneous hand tools
Multimeter
Wiring diagram

Return to Section TOC
Return to Master TOC

WELD CIRCUIT GROUND AND SHORT CIRCUIT TEST PROCEDURE (continued)

PROCEDURE

1. Turn the engine off.

Weld circuit ground test:

2. Measure the resistance between either of the two weld output terminals and a clean chassis ground connection.

   The resistance measurement should be very high 500,000 (500k) Ohms minimum.

If the resistance is lower than 500k Ohms:

3. Remove the welding generator brushes, or pull them away from the commutator and isolate them so they cannot come in contact with anything except the brush holder they are attached to. Remove the jumper plug or wire feed module harness from Plug J5. See wiring diagram.

4. Check the resistance between chassis ground and each output terminal, and between chassis ground and the commutator.

   If the commutator has low resistance to chassis ground, the armature will need to be replaced.

5. If the resistance measured at the "POSITIVE" weld terminal is low, carefully examine the interpole coils, and the heavy leads, and the brush holders connected to the interpole coils. Check for damaged, dirty or missing brush holder insulators. Check for a damaged or dirty weld output terminal. Check the yellow lead connecting the brush holder to Plug J5.

6. If the resistance measured at the "NEGATIVE" terminal is low, examine the range selector switch, the series coils, and the heavy leads and brush holders connected to them. Check for damaged, dirty or missing brush holder insulators. Check for a damaged or dirty weld output terminal. Check the white lead connecting the flashing diode to Plug J5.

7. **Test for a short circuit condition between the electrode and work circuits.**

8. With the brushes still isolated as described above, check the resistance between the two weld terminals. The resistance should be very high, 500,000 (500k) Ohms minimum.

9. If the resistance measurement is too low, check the heavy weld current carrying leads and connections for damaged insulation or dirt buildup between the negative (Series Coils) and positive (Interpole Coils) circuits. If the low resistance point is between the stator coils, the coils will require replacement or repair. Check for insulation damage between the yellow and white leads connecting to J5.

Return to Section TOC
Return to Master TOC

WELDING GENERATOR BRUSH AND COMMUTATOR INSPECTION AND SERVICE PROCEDURE

⚠ WARNING

Service and repair should be performed only by Lincoln Electric factory trained personnel. Unauthorized repairs performed on this equipment may result in danger to the technician or machine operator and will invalidate your factory warranty. For your safety and to avoid electrical shock, please observe all safety notes and precautions detailed throughout this manual.

If for any reason you do not understand the test procedures or are unable to perform the test/repairs safely, contact the Lincoln Electric Service Department for electrical troubleshooting assistance before you proceed. Call 1-888-935-3877.

TEST DESCRIPTION

This procedure provides guidelines for checking and servicing the welding generator commutator and brushes.

MATERIALS NEEDED

Miscellaneous hand tools
120-150 grit commutator stone
220-320 grit commutator stone
IMPORTANT: Do not use emery cloth or paper to clean the commutator. Use only sand paper or a commutator stone.

Caution: Stoning the commutator involves pressing an abrasive stone against a spinning commutator. This procedure can be hazardous if done without proper training, tools and protective equipment. Consult the commutator stone manufacturer's instructions before attempting this procedure.

Return to Section TOC
Return to Master TOC

WELDING GENERATOR BRUSH AND COMMUTATOR INSPECTION AND SERVICE PROCEDURE (continued)

FIGURE F.3 - DRILL MARK LOCATIONS

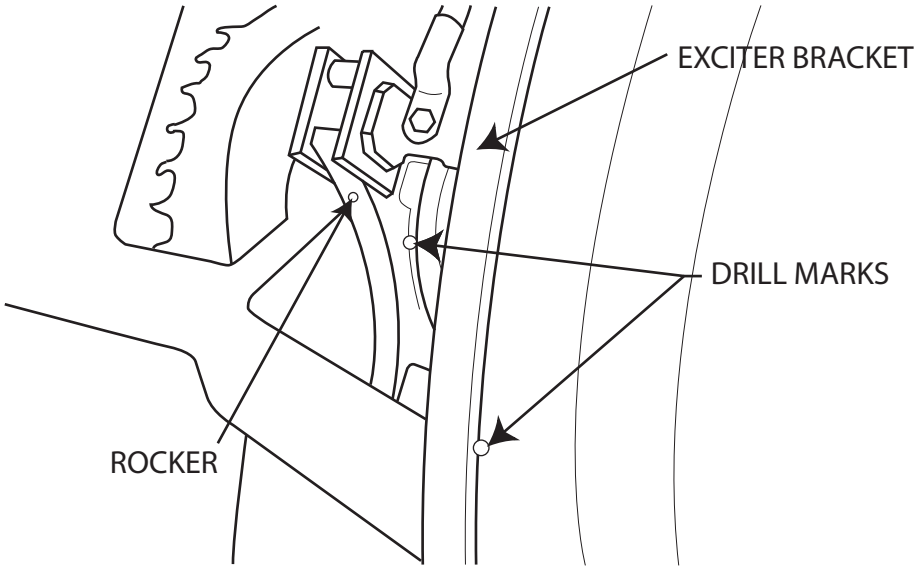

PROCEDURE

1. Shut off the engine.
2. Open either, or both of the side doors of the Classic® 300 machine.

NOTE: Secure the doors in the open position using the door restraint system. If the machine does not have a door restraint system, remove the doors or securely restrain them to prevent them from falling closed.

3. Disconnect the negative battery cable.
4. Remove the cover protecting the welder generator brushes.

Examine the Commutator:

Normal appearance:

The commutator should appear smooth, and have an even brown color where the brushes ride.

Blackened Commutator:

A commutator that appears an even black color all around may indicate a grounded armature, shorted weld circuit, a serious overload condition, or out-of-adjustment rocker. It could also indicate the use of poor quality brushes, or brushes that have been contaminated with oil or some other foreign substance.

- Check the rocker position. Be certain that it is aligned with or very close to the factory drill mark. See Figure F.3. IMPORTANT: If the rocker position requires adjustment, do not over tighten the rocker clamping screw. This screw should be tightened to a torque of 70 to 75 Inch-Lbs. Over tightening can destroy the rocker.
- Perform the ***Weld Circuit Ground and Short Circuit Test.***
- If the weld circuit is not grounded or shorted, and poor brush quality or contamination is suspected, replace the brushes and seat them with a commutator stone or sand paper.
- If brush quality or contamination is not suspected, clean the commutator by lightly stoning the surface. See caution note on commutator stone use.

Return to Section TOC
Return to Master TOC

WELDING GENERATOR BRUSH AND COMMUTATOR INSPECTION AND SERVICE PROCEDURE (continued)

Pitted and Are Damaged Commutator:

If pitting and arc damage to the commutator is evident, the machine may have been used with badly worn brushes. The brush spring tension may have been too low, or the brushes may have been sticking in the holders. An out-of-adjustment rocker or a serious overload may also cause this condition.

- Examine the inside of the brush clovers and other parts that are close to the commutator. If there is a significant amount of solder and debris that has been thrown from the commutator, the armature will need to be replaced and the stator coils must be carefully examined and tested for damage.
- Perform the ***Weld Circuit Ground and Short Circuit Test.***
- If the brushes are worn out, replace them and re-surface or clean the commutator as needed. If the brush springs appear weak, or damaged in any way, replace them as well. The brush holder plates and retainers should be clean, smooth, and undamaged so the brushes can move freely as they wear.
- Check the rocker position. Be certain that it is aligned with or very close to the factory drill mark. ***See Figure F.3.***

IMPORTANT: If the rocker position requires adjustment, do not over tighten the rocker clamping screw. This screw should be tightened to a torque of 70 to 75 Inch-Lbs. Over tightening can destroy the rocker.

Uneven Commutator appearance:

If the commutator appears to have some normal colored bars and some blackened bars, the armature may be shorted.

- If excessive sparking is observed and/or the weld output is abnormal, the armature should be replaced.
- If the commutator has uneven color, but there is no sign of serious generator performance problems, the commutator may only need to be cleaned by lightly stoning the surface. See caution note on commutator stone usage.

Examine the brushes:

The brushes and springs should all be in place and not be excessively worn. Brushes should be replaced if they are worn to within 1/4" of the pigtail lead.

The pigtail lead of each brush should be positioned so it allows free movement of the brush while it wears.

The brushes should be seated so that the face of each brush makes 95% minimum contact with the commutator. Lightly stone the commutator to seat the brushes. See caution note on commutator stone usage.

Examine the brush holders:

The brush holder insulators must be clean and in good condition and all of the hardware must be in place. Replace any insulators that are cracked or damaged in any way.

When installing the brush holders, they should be rotated toward the brush retainer (clockwise rotation when facing the brush holder mounting screw.) until they stop. The edge of the brush holder plate should be parallel with the surface of the commutator and positioned .030 to .090 from the surface of the commutator. The brush holder mounting screw should be tightened to a torque of 24 to 28 Ft Lbs.

The brush holder plate and retainer assembly must be clean and smooth. Nothing should prevent free movement of the brushes. All electrical connections to the brush holders must be clean, and tight. The recommended torque for 5/16-18 brush holder connection screws is 8 Ft-Lbs.

Return to Section TOC
Return to Master TOC

NOTES

Return to Section TOC
Return to Master TOC
Return to Section TOC
Return to Master TOC
Return to Section TOC
Return to Master TOC
Return to Section TOC
Return to Master TOC

SERIES COIL SHORT CIRCUIT TEST PROCEDURE

⚠ WARNING

Service and repair should be performed only by Lincoln Electric factory trained personnel. Unauthorized repairs performed on this equipment may result in danger to the technician or machine operator and will invalidate your factory warranty. For your safety and to avoid electrical shock, please observe all safety notes and precautions detailed throughout this manual.

If for any reason you do not understand the test procedures or are unable to perform the test/repairs safely, contact the Lincoln Electric Service Department for electrical troubleshooting assistance before you proceed. Call 1-888-935-3877.

TEST DESCRIPTION

This test checks the short circuit output of the welding generator at each current range tap. This test should be done if the output is considerably higher than indicated on the current controls, or if there appears to be too little difference between the output of adjacent range switch positions.

CAUTION: Very high loads will be applied to the generator during these tests. Loads higher than 250 amps must only be applied long enough to get stable meter readings. Severe damage may result if a high load is applied for more than a minute or two.

MATERIALS NEEDED

Load bank, preferably with a shorting contactor.
Length of heavy weld cable about 10 feet long (if load bank has no shorting contactor)
Ammeter, able to accurately read about 450 Amps.
Misc. hand tools
Voltmeter or Multimeter Tachometer or Multimeter that can read frequency

Return to Section TOC
Return to Master TOC

SERIES COIL SHORT CIRCUIT TEST PROCEDURE (continued)

PROCEDURE

1. Place the current range switch in the Max position, connect the Classic® 300 to a load bank and start the engine.
2. Apply a load of 250 amps and allow the machine to reach normal operating temperature, (about 30 minutes)
3. Move the fine current control to the max position, and then adjust the load bank to obtain a 300 amp load.
4. Read the engine RPM and the voltage at the output terminals. See the ***Engine RPM Adjustment Tests*** for instructions on how to check RPM.

Kubota powered models should read 1790 to 1810 RPM, and 34 to 48 VDC at the output terminals.

Classic® 300G should read 1780 to 1810 RPM and 33 to 42 VDC at the output terminals.

Perkins powered models should read 1650 to 1750 RPM, and 33 to 42 VDC at the output terminals.

5. Remove the load and place the range switch in the minimum position.
6. Shut down the engine and place the length of cable and ammeter between the output terminals, or close the shorting contactor on the load bank.
7. Start the engine and read the current in the shorting cable. It should read from 95 to 120 Amps.
8. Stop the engine and move the selector switch to the 80 to 130 Amp tap. Restart the engine and read the current in the shorting cable. It should read from 150 to 200 amps.
9. Stop the engine and move the selector switch to the 120 to 190 Amp tap. Restart the engine and read the current in the shorting cable. It should read from 240 to 300 amps.
10. Stop the engine and move the selector switch to the 160 to 240 Amp tap. Restart the engine and read the current in the shorting cable. It should read from 330 to 410 amps.
11. If the current is considerably higher than indicated above for all of the tests, check engine RPM.
12. If some, but not all of the values are significantly higher than specified, the series coils are likely shorted and should be replaced.

Return to Section TOC
Return to Master TOC

Return to Section TOC
Return to Master TOC

NORMAL OPEN CIRCUIT VOLTAGE WAVEFORM (115VAC SUPPLY)

HIGH IDLE – NO LOAD – FINE CURRENT CONTROL RHEOSTAT AT MAXIMUM

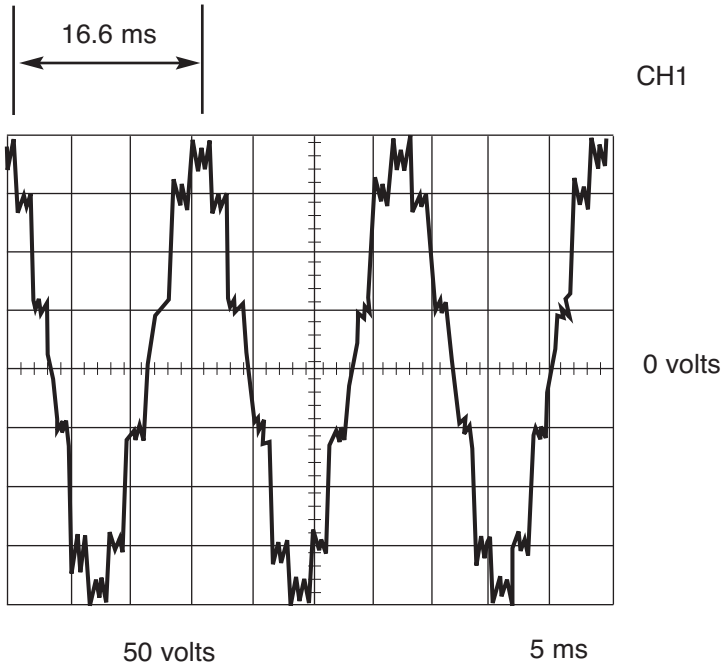

This is the typical auxiliary output voltage generated from a properly operating machine. Note that each vertical division represents 50 volts and that each horizontal division represents 5 milliseconds in time.

Note: Scope probes connected at machine 115VAC receptacle.

SCOPE SETTINGS

Volts/Div	50V/Div.
Horizontal Sweep	5 ms/Div.
Coupling	DC
Trigger	Internal

NORMAL OPEN CIRCUIT DC WELD VOLTAGE WAVEFORM

HIGH IDLE – NO LOAD – FINE CURRENT CONTROL RHEOSTAT AND SELECTOR SWITCH AT MAXIMUM

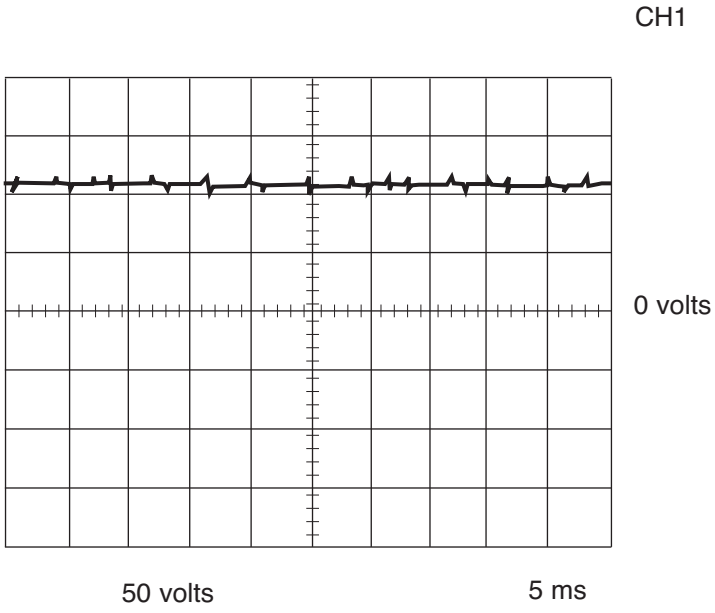

This is the typical DC output voltage generated from a properly operating machine. Note that each vertical division represents 50 volts and that each horizontal division represents 5 milliseconds in time.

Note: Scope probes connected at machine output terminals.

SCOPE SETTINGS

Volts/Div	50V/Div.
Horizontal Sweep	5 ms/Div.
Coupling	DC
Trigger	Internal

Return to Section TOC
Return to Master TOC

Return to Section TOC
Return to Master TOC

TYPICAL DC WELD OUTPUT VOLTAGE WAVEFORM

MACHINE LOADED – SELECTOR SWITCH AT MAXIMUM POSITION

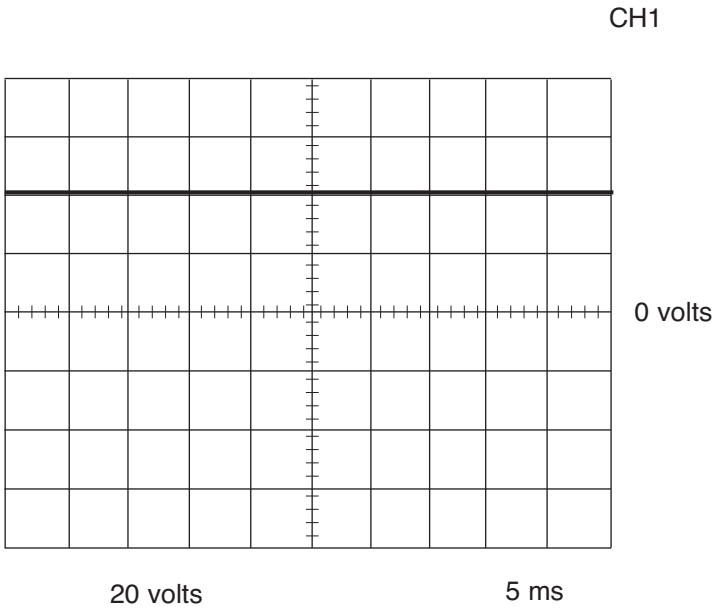

MACHINE LOADED TO 250 AMPS AT 40 VDC

This is the typical DC output voltage generated from a properly operating machine. Note that each vertical division represents 20 volts and that each horizontal division represents 5 milliseconds in time. The machine was loaded with a resistance grid bank.

Note: Scope probes connected at machine output terminals.

SCOPE SETTINGS

Volts/Div	20V/Div.
Horizontal Sweep	5 ms/Div.
Coupling	DC
Trigger	Internal

NOTES

F-62

Return to Section TOC
Return to Master TOC
Return to Section TOC
Return to Master TOC
Return to Section TOC
Return to Master TOC

ALTERNATOR ROTOR REMOVAL AND REPLACEMENT PROCEDURE

⚠ WARNING

Service and repair should be performed only by Lincoln Electric factory trained personnel. Unauthorized repairs performed on this equipment may result in danger to the technician or machine operator and will invalidate your factory warranty. For your safety and to avoid electrical shock, please observe all safety notes and precautions detailed throughout this manual.

If for any reason you do not understand the test procedures or are unable to perform the test/repairs safely, contact the Lincoln Electric Service Department for electrical troubleshooting assistance before you proceed. Call 1-888-935-3877.

DESCRIPTION

This procedure will aid the technician in the removal and replacement of the alternator rotor.

MATERIALS NEEDED

3/8" wrench
1/2" wrench
1-5/8" wrench
Large slot head screwdriver
Small gear puller
5/16” nut driver

Return to Section TOC
Return to Master TOC

ALTERNATOR ROTOR REMOVAL AND REPLACEMENT PROCEDURE (continued)

PROCEDURE

1. Turn the engine off.
2. Using the 7/16” wrench, remove the two bolts and washers and partially slide out the battery mounting panel. See Figure F.4
3. With the 1/2" wrench, disconnect the negative battery cable.

FIGURE F.4 – BATTERY PANEL REMOVAL

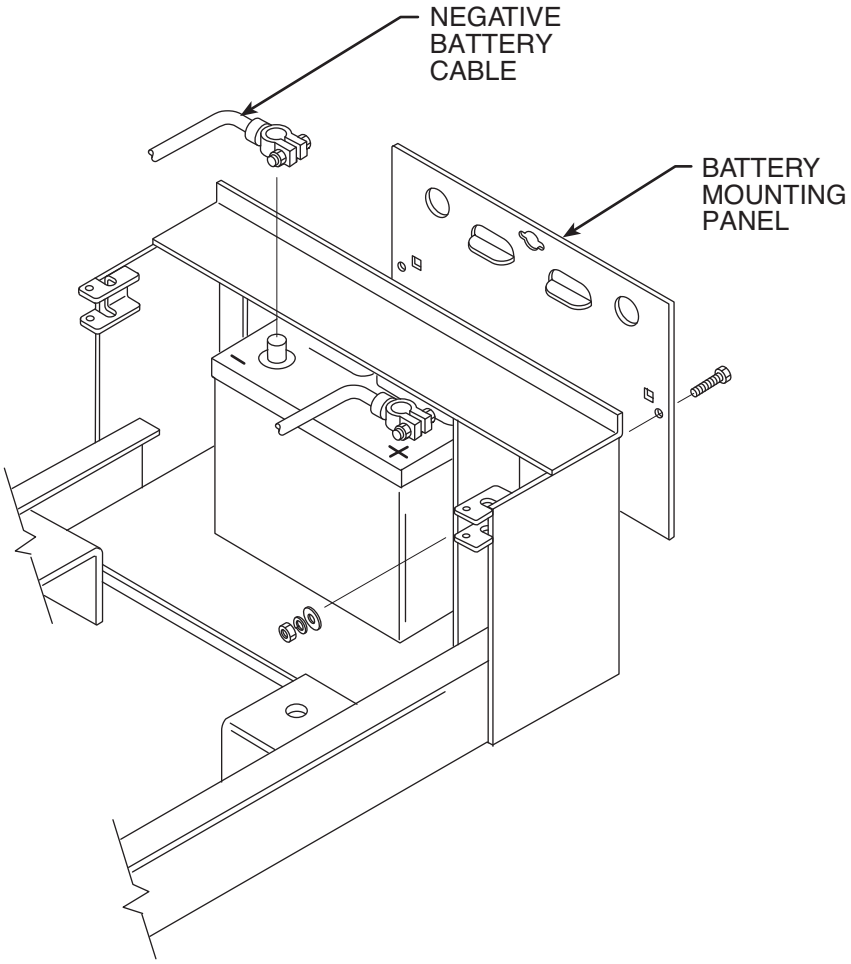

Return to Section TOC
Return to Master TOC

ALTERNATOR ROTOR REMOVAL AND REPLACEMENT PROCEDURE (continued)

See Figure F.5 for steps 3 - 5.

3. With the 3/8" wrench, loosen the screws on the left and right sides and bottom of the alternator wrap-around.
4. With the 5/16" wrench, remove the 4 screws from the alternator cover.
5. Remove the alternator cover and wrap-around. Be careful to clear the leads.

FIGURE F.5 – ALTERNATOR COVER AND WRAPAROUND REMOVAL

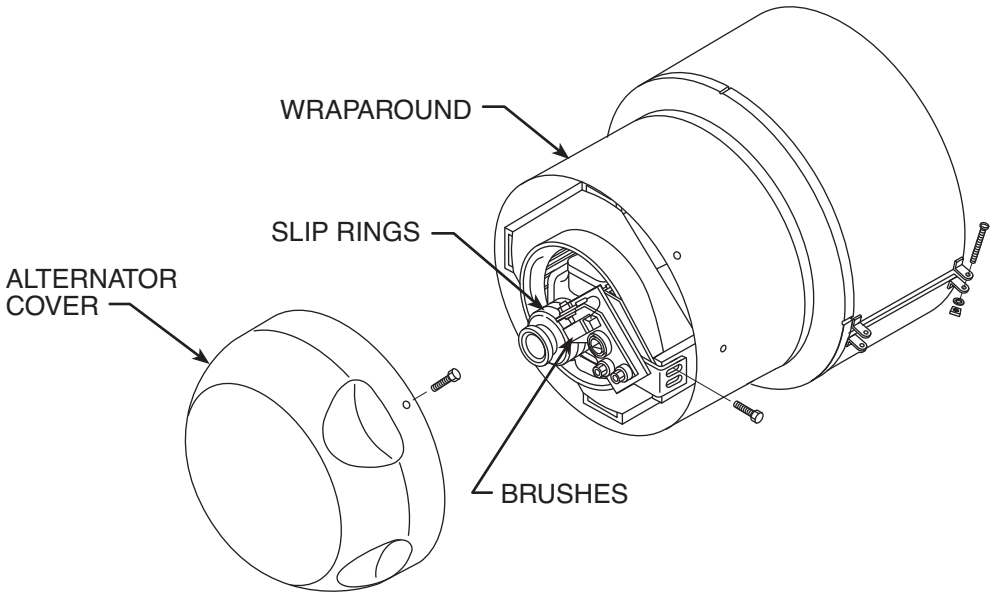

Return to Section TOC
Return to Master TOC

ALTERNATOR ROTOR REMOVAL AND REPLACEMENT PROCEDURE (continued)

See Figure F.6 for steps 6 - 8.

6. With the 7/16" wrench, remove the two bolts, nuts and washers mounting the brush holder assembly to the stator frame.
7. Bend the flat washer away from the rotor locking nut.
8. With the 1-5/8" socket wrench, remove the rotor locking nut, washer and sleeve collar.

NOTE: The sleeve collar will have to be removed with a gear puller. Be careful not to damage the rotor slip ring assembly. Remove the rotor by pulling it free of the generator shaft.

FIGURE F.6 – ROTOR REMOVAL

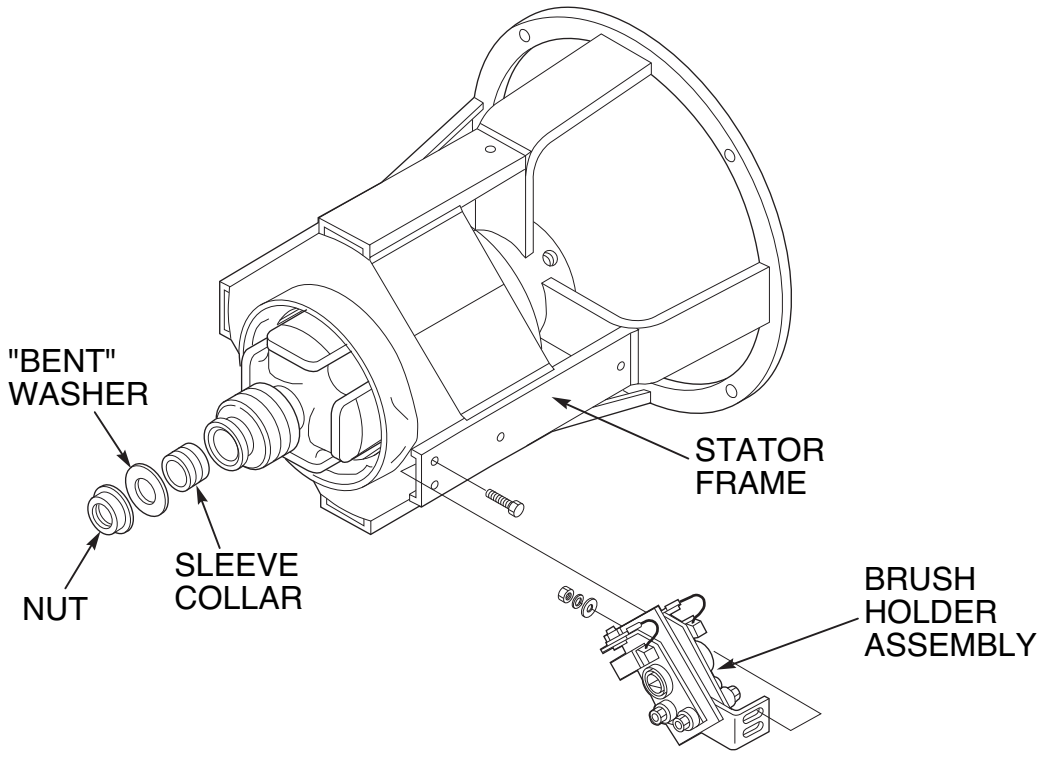

Return to Section TOC
Return to Master TOC

ALTERNATOR ROTOR REMOVAL AND REPLACEMENT PROCEDURE (continued)

Replacement

9. Carefully mount the rotor onto the generator shaft. Install a new sleeve collar (part number T14337), washer, and rotor locking nut.

   NOTE: Be careful not to damage or deform the new sleeve collar. Carefully tap the new sleeve collar into position. The rotor locking nut should be torqued to 175 ft.-lbs.

   After the rotor locking nut is properly torqued, bend the washer down over the locking nut.

   Check rotor air gap. .017" minimum is allowed.

10. Mount the brush holder assembly to the stator frame using two bolts, washers, and nuts.

Installing and Seating Exciter Slip Ring Brushes

a. Make sure the slip rings are clean and free from oil and grease.

b. Spacing between the brush holder and slip rings must be .050" to .090". Adjust as required.

c. Before placing the exciter brushes in their holders, twist the brush pigtail at its entrance to the brush until the strands are tightly packed and no part of the pigtail protrudes beyond the brush surface in the pigtail slot. When the brush is placed in the holder, clear the pigtail from the side of the holder to allow free radial movement of the brush.

d. The exciter brush spring must lie flat on the corner of the brush and not touch either side of the retainer.

e. With the brushes in place, insert one end of a minimum 24" long piece of 180 grit sandpaper between the slip rings and brushes (abrasive against brushes). With slight additional finger pressure on top of brushes, pull the paper around the circumference of the rings in the direction of rotation only. Repeat this procedure until the entire face of the brush is contoured to the radius of the slip ring.

f. Check the brushes to be certain that there is spring tension holding them firmly against the slip rings.

11. Install the alternator cover and wrap-around.

12. Connect the negative battery cable.

Return to Section TOC
Return to Master TOC

NOTES

Return to Section TOC
Return to Master TOC
Return to Section TOC
Return to Master TOC
Return to Section TOC
Return to Master TOC

ALTERNATOR STATOR REMOVAL AND REPLACEMENT PROCEDURE

⚠ WARNING

Service and repair should be performed only by Lincoln Electric factory trained personnel. Unauthorized repairs performed on this equipment may result in danger to the technician or machine operator and will invalidate your factory warranty. For your safety and to avoid electrical shock, please observe all safety notes and precautions detailed throughout this manual.

If for any reason you do not understand the test procedures or are unable to perform the test/repairs safely, contact the Lincoln Electric Service Department for electrical troubleshooting assistance before you proceed. Call 1-888-935-3877.

DESCRIPTION

This procedure will aid the technician in the removal and replacement of the alternator stator.

MATERIALS NEEDED

3/8" nut driver
3/8" wrench
1/2" wrench
Slot head screwdriver
Pry bar
5/8" wrench
7/16" wrench

Return to Section TOC
Return to Master TOC

ALTERNATOR STATOR REMOVAL AND REPLACEMENT (continued)

FIGURE F.7 – COMMUTATOR WRAP-AROUND REMOVAL

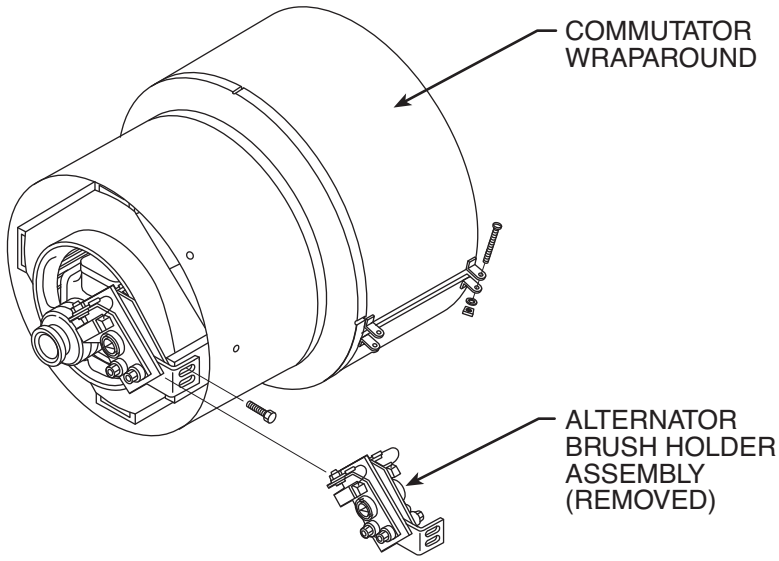

PROCEDURE

1. Turn the engine OFF.
2. Perform the ***Alternator Rotor Removal*** procedure.
3. With the 1/2" wrench, remove the four nuts and bolts holding the case top and doors assembly to the welder frame. Carefully lift up and remove the top and doors assembly.
4. With the 3/8" nut driver, remove the two leads from the alternator brush holder assembly. Note lead placement. Set brush holder aside.
5. With the slot head screwdriver, remove the commutator wraparound. See Figure F.7.
6. Disconnect the yellow and white wires at the in-line connectors. See the Wiring Diagram and ***Figure F.8.***
7. Disconnect the two yellow leads. One is located at the field bridge and the other at the field fuse holder. Cut any necessary cable ties. See ***Figure F.8 and F.9.***
8. Remove the tape and using the 3/8" wrench and slot head screw driver, disconnect the black auxiliary power lead from the current transformer. Cut any necessary cable ties. See the Wiring Diagram and ***Figure F.8.***
9. Remove the red auxiliary power lead from the CB4 circuit breaker. See the Wiring Diagram and ***Figure F.9.***
10. Remove the white auxiliary power lead from the 115VAC receptacle. Cut any necessary cable ties. ***See Figure F.9.***

NOTE: The CB1 circuit breaker may have to be removed to access the terminal for the white lead.

11. Remove the red lead from the negative terminal of the field rectifier bridge. See ***Figure F.9.***
12. Remove the black lead from the positive terminal of the field rectifier bridge. See ***Figure F.9.***

Return to Section TOC
Return to Master TOC

ALTERNATOR STATOR REMOVAL AND REPLACEMENT (continued)

FIGURE F.8 - LEAD DISCONNECTION POINTS

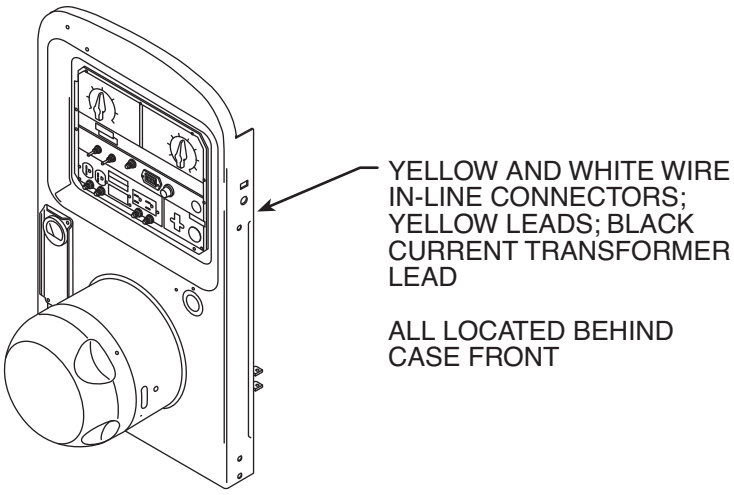

FIGURE F.9- LEAD DISCONNECTION – CIRCUIT BREAKER, RECEPTACLES, FIELD BRIDGE RECTIFIER

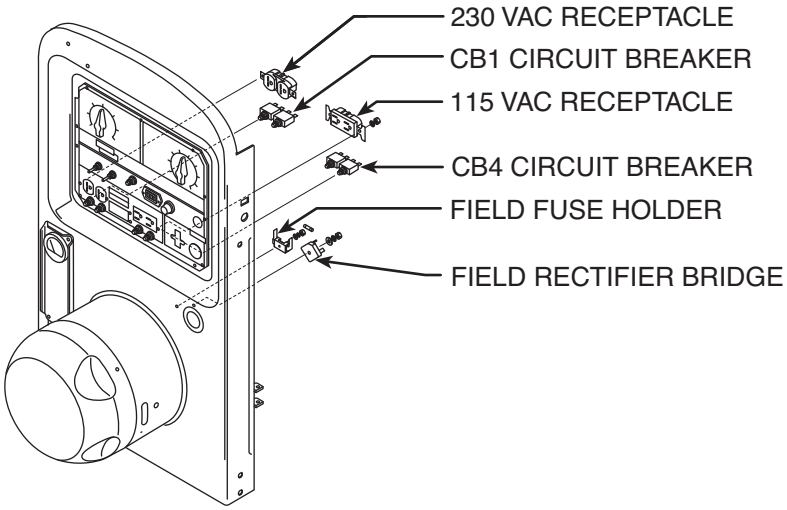

Return to Section TOC
Return to Master TOC

Return to Section TOC
Return to Master TOC

ALTERNATOR STATOR REMOVAL AND REPLACEMENT *(continued)*

13. Clear the leads in preparation for removing the stator/end bracket.

14. Lift the eight brushes from the commutator. Note the position of the brushes for reassembly.

FIGURE F.10 - GENERATOR BRUSH HOLDER CABLE REMOVAL

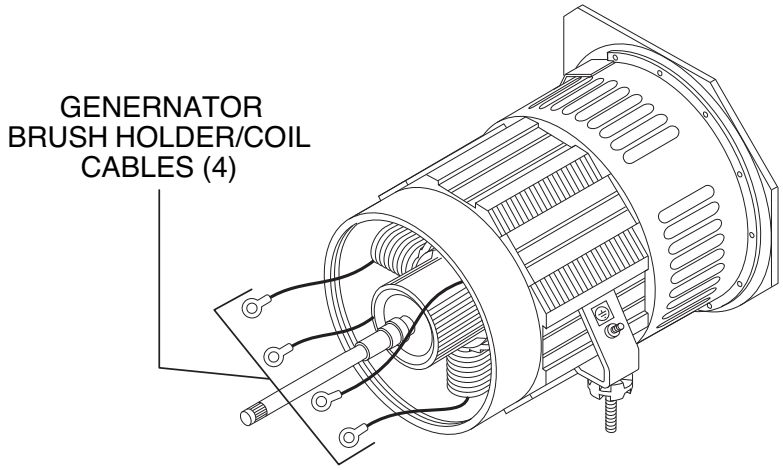

15. With the 1/2" wrench, disconnect and clear the four heavy cables from the generator brush holders to the coils in the generator frame. It is not necessary to remove the brush holder jumper cables. See Figure F.10. Label leads and positions for re-assembly.

ALTERNATOR STATOR REMOVAL AND REPLACEMENT (continued)

FIGURE F.11 - DRILL SPOT LOCATIONS

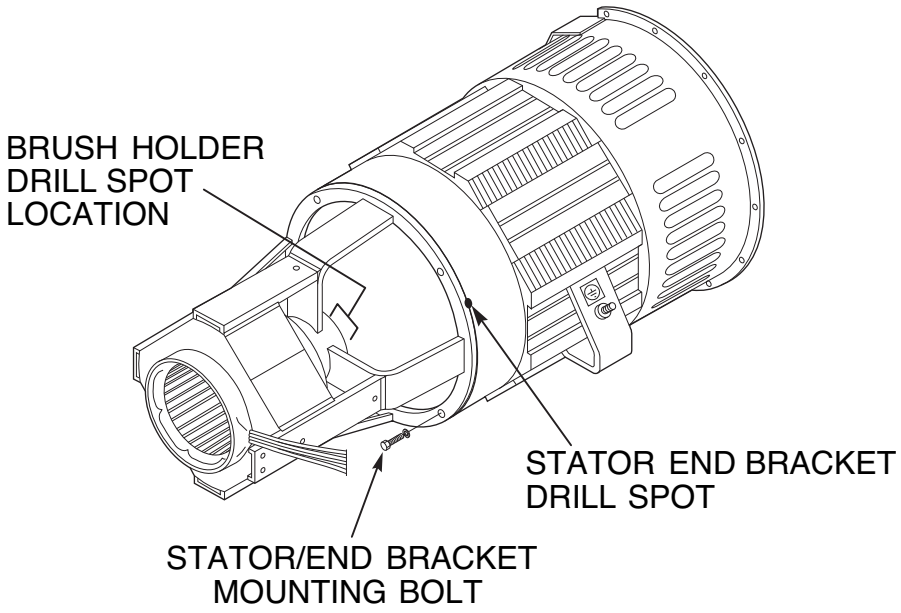

16. With the 5/8" wrench, remove the four bolts mounting the stator/end bracket assembly to the generator frame. Note the "drill spot" for reassembly. See Figure F.11.
17. With the 7/16" wrench, loosen (do not remove) the generator brush holder clamping bolt. Note the drill spot for reassembly. See Figure F.11.
18. Carefully pry the stator/end bracket assembly away from the generator frame.

NOTE: The generator brush holder assembly will also be removed.

Replacement

19. Mount the stator/end bracket assembly to the generator frame. Line up the mating parts at the stator end bracket drill spot. Tighten the four mounting bolts with the 5/8" wrench.
20. Check armature air gap. Minimum gap is .035." Loosen the four mounting bolts; adjust and re-tighten if necessary.
21. Tighten the generator brush holder assembly with the 7/16" wrench. Note brush holder drill spot.
22. Connect the four heavy cables from the generator frame coils to the generator brush holders.
23. Install the eight commutator brushes according to how you marked their positions at disassembly.
24. Attach the black lead to the positive terminal of the field rectifier bridge. Attach the red lead to the negative terminal.
25. Attach the white auxiliary power lead to the 115 VAC receptacle. Attach the red auxiliary power lead to the CB4 circuit breaker. Attach the black auxiliary power lead to the current transformer. Tape the bolted connection.
26. Connect the two yellow leads to the field bridge and to the field fuse holder. Connect the white and yellow wires at the in-line connectors.
27. Install the commutator wraparound, the bottom alternator cover, the battery, and the alternator brush holder assembly.
28. Install the alternator rotor according to the reassembly directions in the ***Alternator Rotor Removal and Replacement*** procedure. Before installing the case top and sides, replace any cable ties cut for disassembly.

Return to Section TOC
Return to Master TOC

NOTES

F-74

Return to Section TOC
Return to Master TOC
Return to Section TOC
Return to Master TOC
Return to Section TOC
Return to Master TOC

GENERATOR FRAME
REMOVAL AND REPLACEMENT PROCEDURE

⚠ WARNING

Service and repair should be performed only by Lincoln Electric factory trained personnel. Unauthorized repairs performed on this equipment may result in danger to the technician or machine operator and will invalidate your factory warranty. For your safety and to avoid electrical shock, please observe all safety notes and precautions detailed throughout this manual.

If for any reason you do not understand the test procedures or are unable to perform the test/repairs safely, contact the Lincoln Electric Service Department for electrical troubleshooting assistance before you proceed. Call 1-888-935-3877.

DESCRIPTION

This procedure will aid the technician in the removal and replacement of the DC generator frame.

MATERIALS NEEDED

Rope sling
3/4" wrench
1/2" wrench
9/16" wrench
Wood or steel blocks
Pry bars

Return to Section TOC
Return to Master TOC

GENERATOR FRAME
REMOVAL AND REPLACEMENT (continued)

FIGURE F.12 – FUEL TANK / OUTPUT CABLE REMOVAL

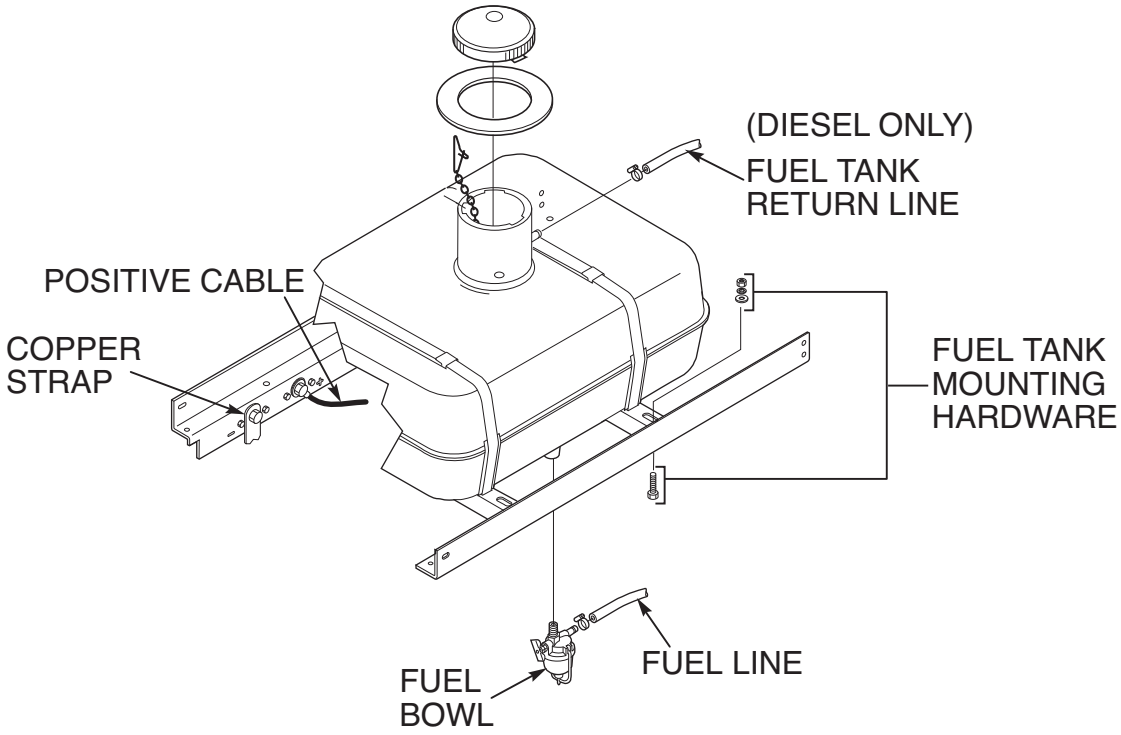

PROCEDURE

1. Turn the engine OFF.
2. Perform the ***Alternator Rotor Removal*** procedure.
3. Perform the ***Alternator Stator Removal*** procedure.

See Figure F.12 for steps 4 - 9.

4. Turn off the fuel at the fuel bowl and remove the fuel line. Plug the line to prevent spillage.
5. Remove the fuel return line from the top of the fuel tank (diesel engine only).
6. With the 9/16" wrench, remove the four nuts, bolts, and washers that mount the fuel tank to the rails.
7. Carefully remove the fuel tank.

NOTE: At reassembly, the fuel line may have to be purged. See the ***Maintenance*** section (Diesel only).

8. With the 3/4" wrench, remove the copper strap/reed switch assembly from the negative output terminal. Clear the strap.
9. With the 3/4" wrench, remove the cable from the positive output terminal.

Return to Section TOC
Return to Master TOC

GENERATOR FRAME
REMOVAL AND REPLACEMENT (continued)

FIGURE F.13 – WIRE AND SELECTOR SWITCH CONNECTIONS

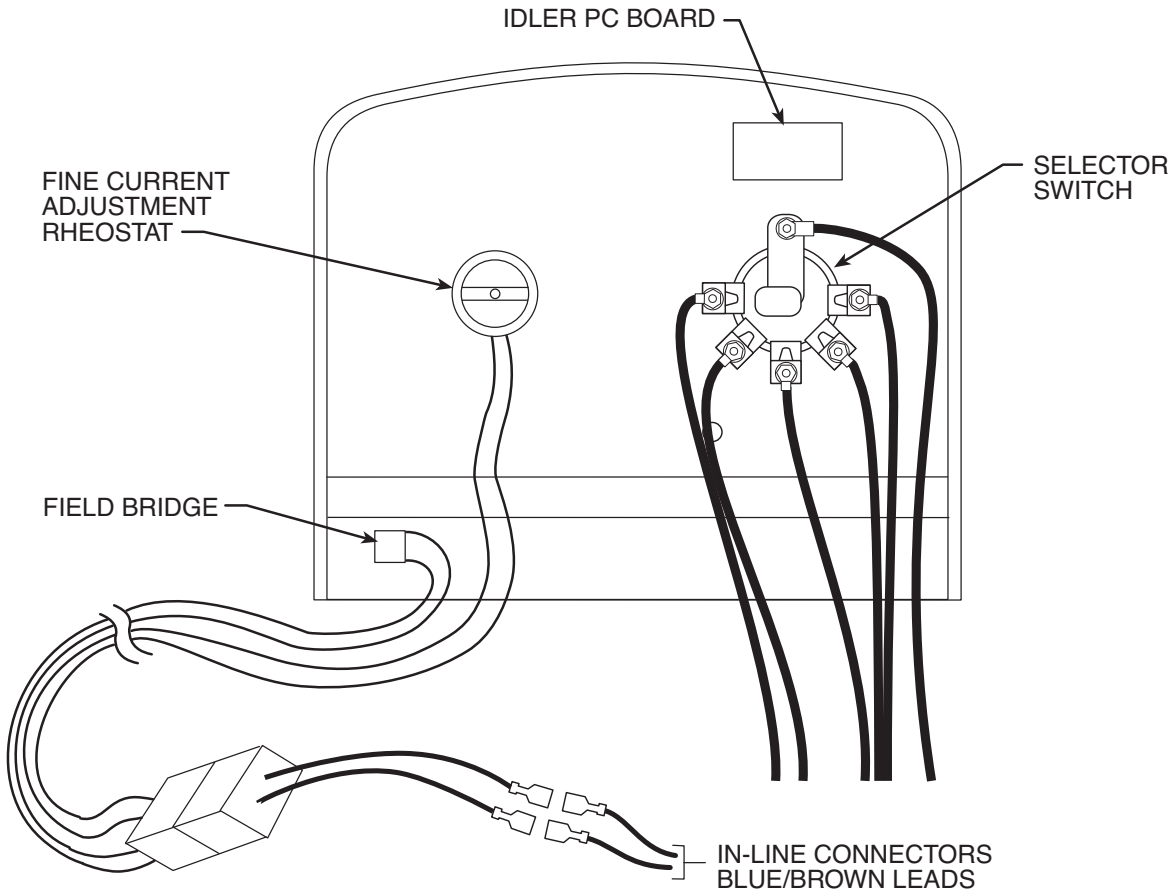

See Figure F.13 for steps 10 - 13.

10. Cut all necessary cable ties.
11. Disconnect the blue and the brown wires at the in-line connectors. See Figure F.13 and the Wiring Diagram.
12. Label the cables that are connected to the selector switch. Otherwise, you will need to see the Wiring Diagram during reassembly.
13. With the 1/2" wrench, remove the cables connected to the selector switch.

Return to Section TOC
Return to Master TOC

GENERATOR FRAME
REMOVAL AND REPLACEMENT (continued)

FIGURE F.14 – CASE FRONT REMOVAL

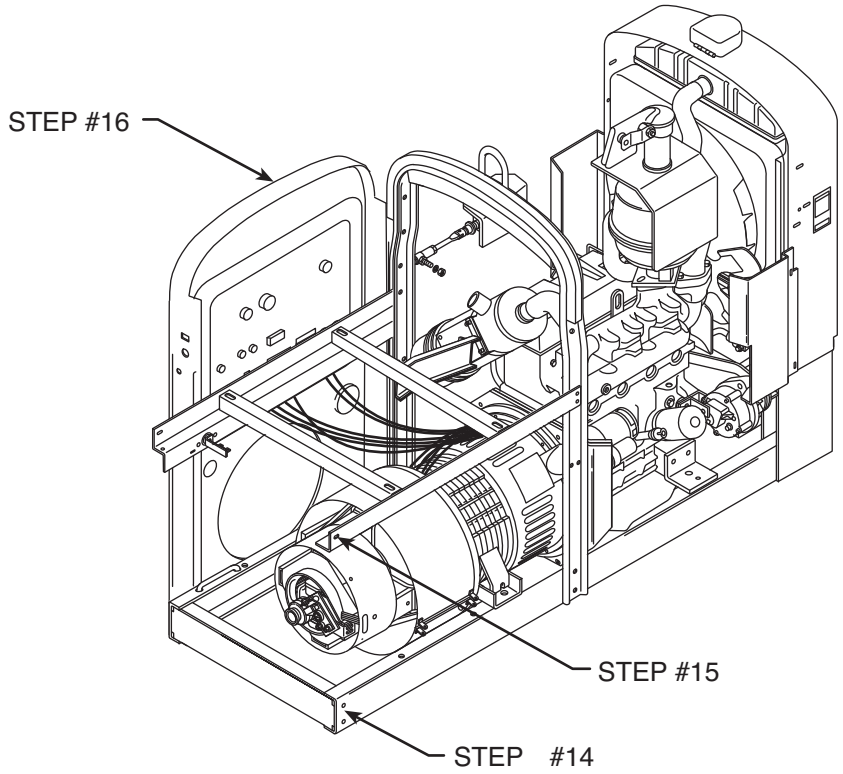

See Figure F.14 for steps 14 - 16.

14. With the 9/16" wrench, remove the four bolts and lock washers holding the case front to the welder frame. There are two bolts on each side.
15. With the 1/2" wrench, remove the two bolts and nuts and washers from the fuel tank rails - one on each side.
16. Carefully clear and disconnect any necessary remaining leads and lift up and set the front panel assembly to the left side of the machine. Make sure all leads are clear.

Return to Section TOC
Return to Master TOC

GENERATOR FRAME
REMOVAL AND REPLACEMENT (continued)

FIGURE F.15 – FRAME MOUNTING DETAILS

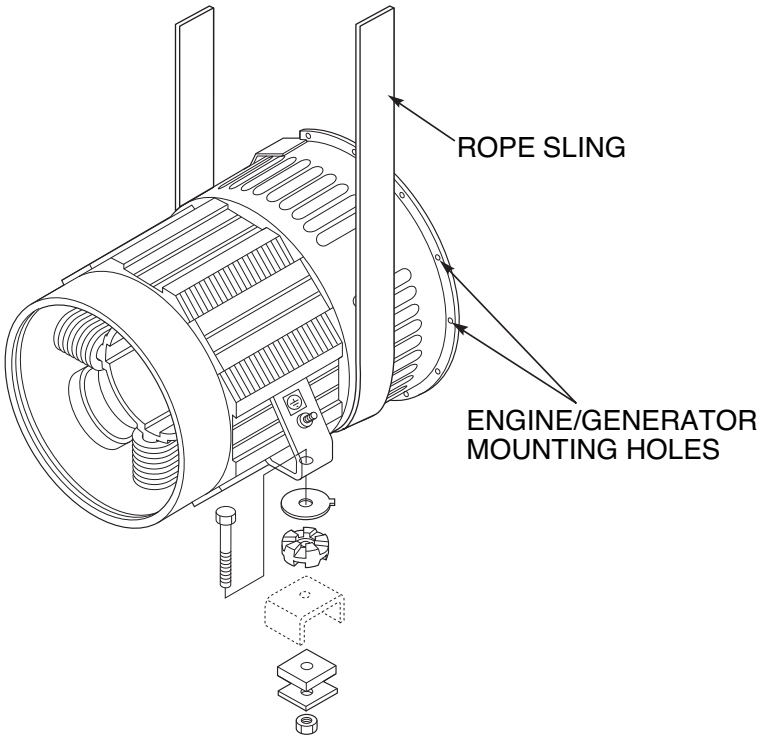

See Figure F.15 for steps 17 - 20.

17. With the 3/4" wrench, remove the frame mounting bolts, nuts and spacers from the feet of the generator frame.
18. With the rope sling around the generator frame, carefully lift the frame and engine assembly a small distance. Slide the wood or steel block under the engine adapter plate.
19. With the 9/16" wrench, remove the bolts mounting the engine to the generator frame.
20. Using the rope sling and pry bars, carefully lift and "wiggle" the generator frame away from the engine and armature assembly. Be careful to support the generator frame as you remove it.

Replacement

21. Support the generator frame with the rope sling. Mount the generator frame to the engine and armature assembly. Before removing the rope sling, be careful to support the generator frame with the wood or steel block under the engine adapter plate. With the 9/16" wrench, install the bolts that attach the generator frame to the engine.
22. With the 3/4" wrench, install the frame mounting bolts, nuts, and spacers to the feet of the generator frame. See Figure F.15.
23. Install the case front to the welder frame. *See steps 14 - 16.*
24. Connect the cables to the selector switch according to how you labeled them during disassembly. See the Wiring Diagram if necessary.
25. Reconnect the blue and brown leads at the in-line connectors.
26. Install the copper strap/reed switch assembly to the negative output terminal.

Return to Section TOC
Return to Master TOC

GENERATOR FRAME
REMOVAL AND REPLACEMENT (continued)

27. Re-attach the positive output terminal cable.
28. Set the fuel tank into position on the rails and secure it with the four bolts, washers, and nuts.
29. Attach the fuel return line at the top of the fuel tank (Diesel engine only). Remove the plug from the fuel line and attach it to the fuel bowl.
30. Perform the replacement procedures according to each of the following:

Alternator Stator Removal and Replacement

Alternator Rotor Removal and Replacement

Before installing the machine case top and sides, be sure to replace any cable ties cut during disassembly.

Return to Section TOC
Return to Master TOC

GENERATOR ARMATURE REMOVAL AND REPLACEMENT PROCEDURE

⚠ WARNING

Service and repair should be performed only by Lincoln Electric factory trained personnel. Unauthorized repairs performed on this equipment may result in danger to the technician or machine operator and will invalidate your factory warranty. For your safety and to avoid electrical shock, please observe all safety notes and precautions detailed throughout this manual.

If for any reason you do not understand the test procedures or are unable to perform the test/repairs safely, contact the Lincoln Electric Service Department for electrical troubleshooting assistance before you proceed. Call 1-888-935-3877.

DESCRIPTION

This procedure will aid the technician in the removal and replacement of the main armature.

MATERIALS NEEDED

Rope sling
5/8" wrench
Wood or steel blocks

Return to Section TOC
Return to Master TOC

GENERATOR ARMATURE
REMOVAL AND REPLACEMENT PROCEDURE (continued)

FIGURE F.16 – BLOWER PADDLE REMOVAL

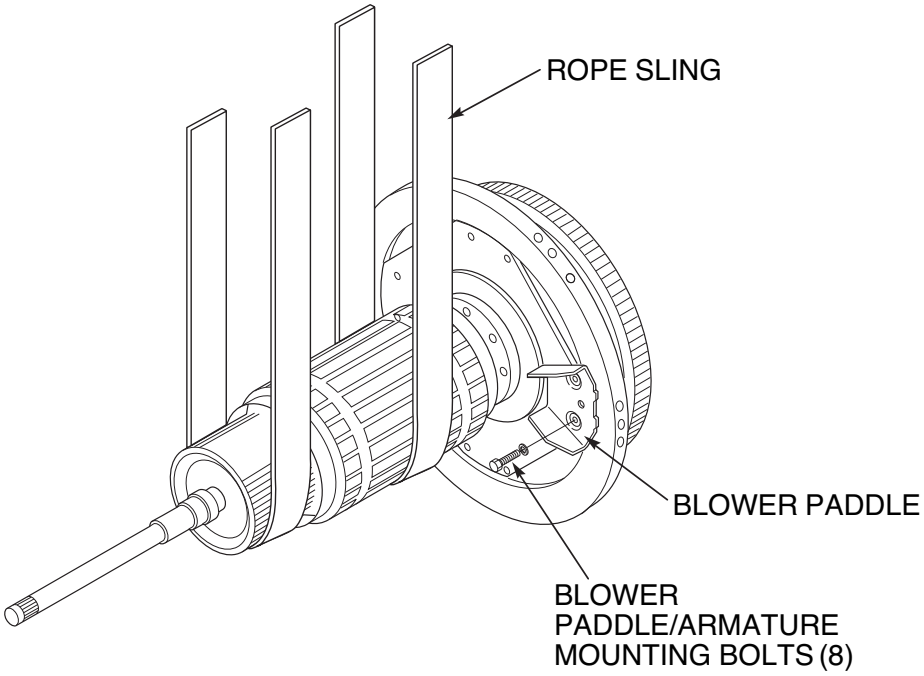

PROCEDURE

1. Turn the engine OFF.
2. Perform the ***Alternator Rotor Removal*** procedure.
3. Perform the ***Alternator Stator Removal*** procedure.
4. Perform the ***Generator Frame Removal*** procedure.
5. Using the rope sling, support the armature.
6. Make sure the engine is supported with the wood or steel blocks.
7. With the 5/8" wrench, remove the eight bolts and lock washers holding the blower paddles and the armature to the engine flywheel. See Figure F.16.
8. With the armature supported and “balanced” in the rope sling, carefully rotate the armature 1/8 turn in either direction to release.

⚠ CAUTION

The armature is now free to be removed from the engine.

Replacement:

9. Support the armature with the rope sling. Mount the armature to the engine, rotating it 1/8 of a turn in either direction to achieve proper attachment. Before removing the rope sling, be careful to support the armature with the wood or steel blocks under the engine. With the 5/8" wrench, install the eight bolts and lock washers that attach the blower paddles and the armature to the engine flywheel.
10. Perform the replacement procedures according to each of the following:

Generator Frame Removal and Replacement

Alternator Stator Removal and Replacement

Alternator Rotor Removal and Replacement

Return to Section TOC
Return to Master TOC

Return to Section TOC
Return to Master TOC

RETEST AFTER REPAIR

Retest a machine:

- If it is rejected under test for any reason that requires you to remove any mechanical part which could affect the machine's electrical characteristics.

OR

- If you repair or replace any electrical components.

ENGINE OUTPUT

Mode	No Load RPM	Load RPM
Low Idle	1325 - 1475	NA
High Idle	1780 - 1810	1650 - 1750

WELDER DC OUTPUT

Current Control Rheostat	Current Selector Switch	Open Circuit Voltage	Load Volts	Load Amps
Maximum	Maximum	91 - 98.5	36 - 45 Gas	350
Maximum	Maximum	91 - 98.5	38 - 47 Diesel	350

AC AUXILIARY POWER RECEPTACLE OUTPUT

230 Volt Receptacle			115 Volt Receptacle		
Open Circuit Voltage	Load Volts	Load Amps	Open Circuit Voltage	Load Volts	Load Amps
240 - 254	210 - 225	13.8	118 -128	103 - 112	26.0

FIELD AMPS AND VOLTS (Current Rheostat at Maximum)

Exciter DC Volts	Shunt Field Amps	Alt. Rotor Amps	RPM
123 - 133	2.0 - 2.4	2.2 - 2.6	1780 - 1810

NOTES

Return to Section TOC
Return to Master TOC
Return to Section TOC
Return to Master TOC
Return to Section TOC
Return to Master TOC
Return to Section TOC
Return to Master TOC

TABLE OF CONTENTS - DIAGRAM SECTION

Electrical Diagrams G-1

Wiring Diagram (Codes 10545, 10546, 10657, 10658) (L10877) G-2

Wiring Diagram (Code 10659) (L11194) G-3

Wiring Diagram (Codes 10911, 10927) (L11865) G-4

Wiring Diagram (Codes 10912, 11135) (L11866) G-5

Wiring Diagram (Codes 11110, 11111) (M20499) G-6

Wiring Diagram (Codes 11112, 11113) (M20432) G-7

Wiring Diagram (Codes 11243, 11244) (M20432-1) G-8

Wiring Diagram (Codes 11248, 11249, 11280, 11281) (M20616) G-9

Wiring Diagram (Codes 11411, 11412) (M21292) G-10

Wiring Diagram (Codes 111413, 11414) (M21293) G-11

Wiring Diagram (Codes 111472, 11473) (M21684) G-12

Wiring Diagram (Codes 111474, 11475) (M21563) G-13

Schematic – Complete Machine (Codes 11110, 11111) (L12412) G-14

Schematic – Complete Machine (Codes 11112, 11113) (L12265) G-15

Schematic – Complete Machine (Codes 11243, 11244) (L12265-1) G-16

Schematic – Complete Machine (Codes 11248, 11249, 11280, 11281) (L12561) G-17

Schematic – Complete Machine (Codes 11411, 11412) (L13096) G-18

Schematic – Complete Machine (Codes 11413, 11414) (L13097) G-19

Schematic – Complete Machine (Codes 11472, 11473) (L13672) G-20

Schematic – Complete Machine (Codes 11474, 11475) (L13351) G-21

Wiring Diagram - Wire Feed Module Option (L9259) G-22

Schematic - Wire Feed Module Option (G2562) G-23

Schematic – Idler (Codes 10545, 10546, 10657, 10658, 10911, 10927) (L10826) G-24

Schematic – Idler (Codes 11110 thru 11475 Perkins Engine Only) (G4828) G-25

Schematic – Current Sensor PC Bd (Kubota Engine Only) (S25973) G-26

*** NOTE:** Many PC Board Assemblies are now totally encapsulated, surface mounted and or multi-layered and are therefore considered to be unserviceable. Assembly drawings of these boards are no longer provided.

Return to Master TOC
Return to Master TOC
Return to Master TOC
Return to Master TOC

WIRING DIAGRAM - CODES 10545, 10546, 10657, 10658) (L10877)

CLASSIC 300D WIRING DIAGRAM

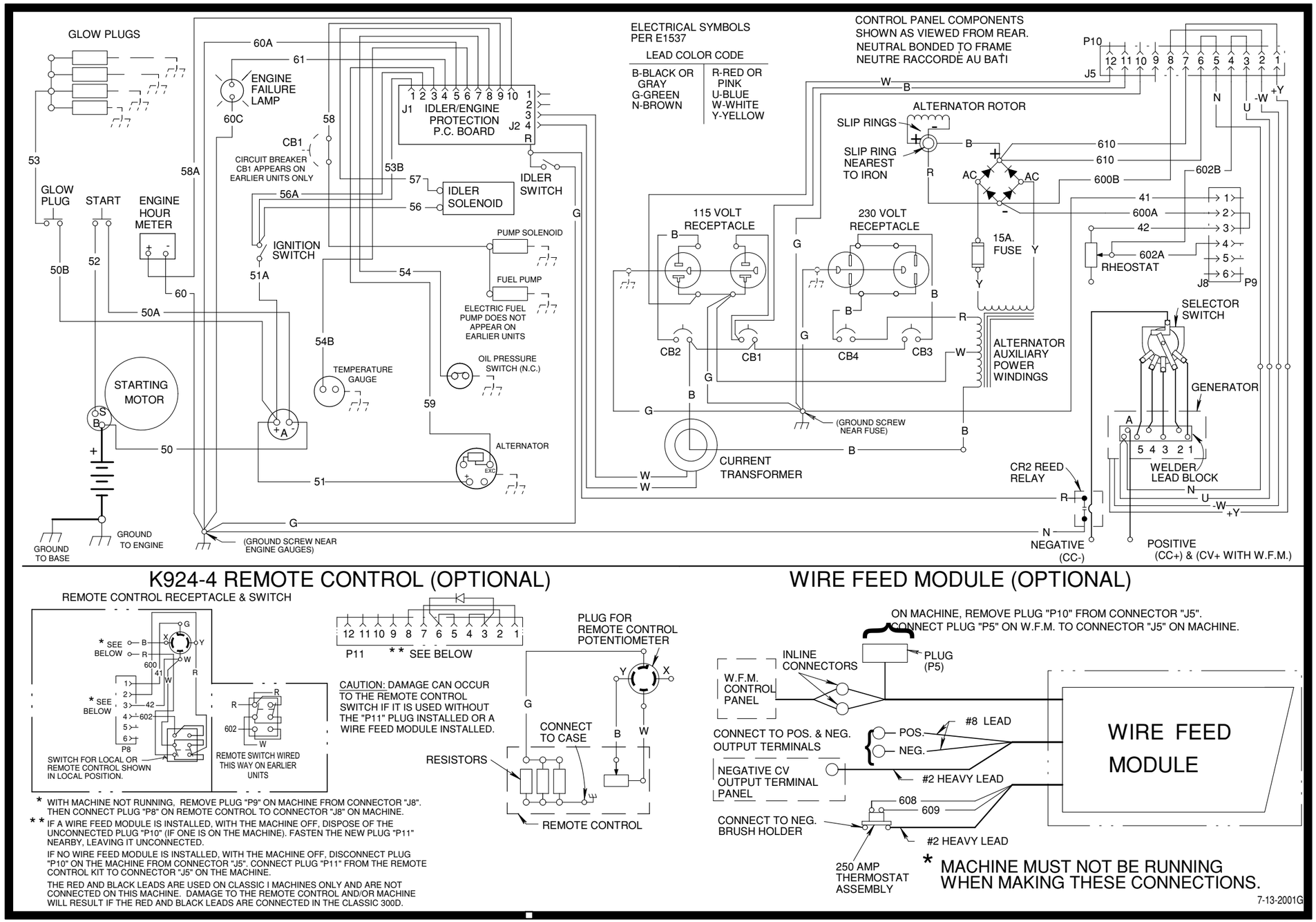

K924-4 REMOTE CONTROL (OPTIONAL)

* WITH MACHINE NOT RUNNING, REMOVE PLUG "P9" ON MACHINE FROM CONNECTOR "J8". THEN CONNECT PLUG "P8" ON REMOTE CONTROL TO CONNECTOR "J8" ON MACHINE.

** IF A WIRE FEED MODULE IS INSTALLED, WITH THE MACHINE OFF, DISPOSE OF THE UNCONNECTED PLUG "P10" (IF ONE IS ON THE MACHINE). FASTEN THE NEW PLUG "P11" NEARBY, LEAVING IT UNCONNECTED.

IF NO WIRE FEED MODULE IS INSTALLED, WITH THE MACHINE OFF, DISCONNECT PLUG "P10" ON THE MACHINE FROM CONNECTOR "J5". CONNECT PLUG "P11" FROM THE REMOTE CONTROL KIT TO CONNECTOR "J5" ON THE MACHINE.

THE RED AND BLACK LEADS ARE USED ON CLASSIC I MACHINES ONLY AND ARE NOT CONNECTED ON THIS MACHINE. DAMAGE TO THE REMOTE CONTROL AND/OR MACHINE WILL RESULT IF THE RED AND BLACK LEADS ARE CONNECTED IN THE CLASSIC 300D.

WIRE FEED MODULE (OPTIONAL)

* MACHINE MUST NOT BE RUNNING WHEN MAKING THESE CONNECTIONS.

7-13-2001G

L10877

NOTE: This diagram is for reference only. It may not be accurate for all machines covered by this manual. The wiring diagram specific to your code is pasted inside one of the enclosure panels of your machine.

Return to Section TOC Return to Master TOC

WIRING DIAGRAM - (CODE 10659) (L11194)

CLASSIC 300G WIRING DIAGRAM

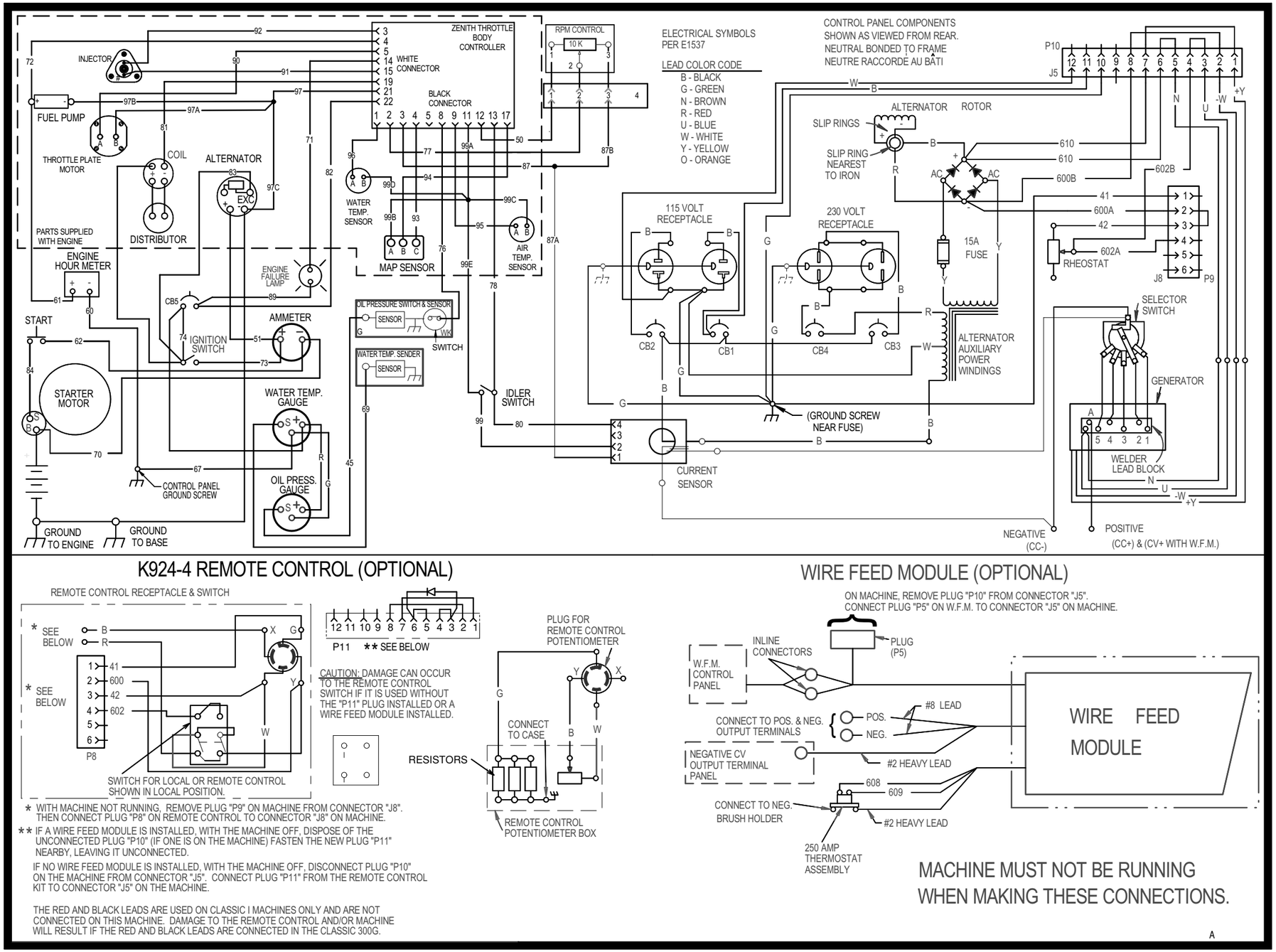

NOTE: This diagram is for reference only. It may not be accurate for all machines covered by this manual. The wiring diagram specific to your code is pasted inside one of the enclosure panels of your machine.

Return to Section TOC
Return to Master TOC

WIRING DIAGRAM - (CODES 10911, 10927) (L11865)

CLASSIC 300D WIRING DIAGRAM

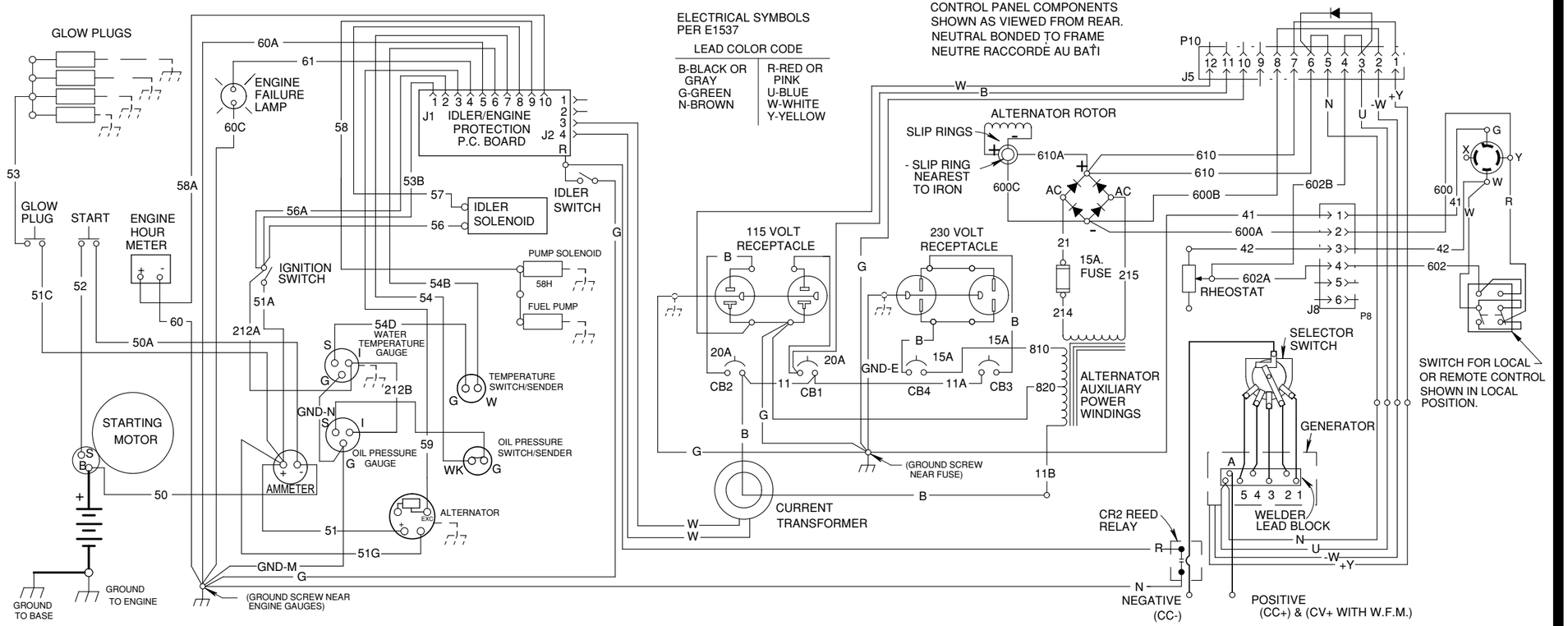

K924-5 REMOTE CONTROL (OPTIONAL)

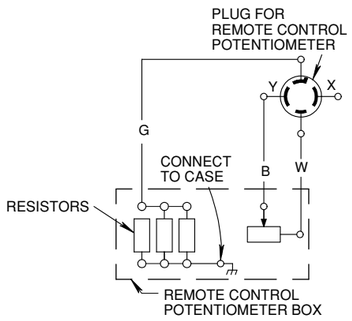

WIRE FEED MODULE (OPTIONAL)

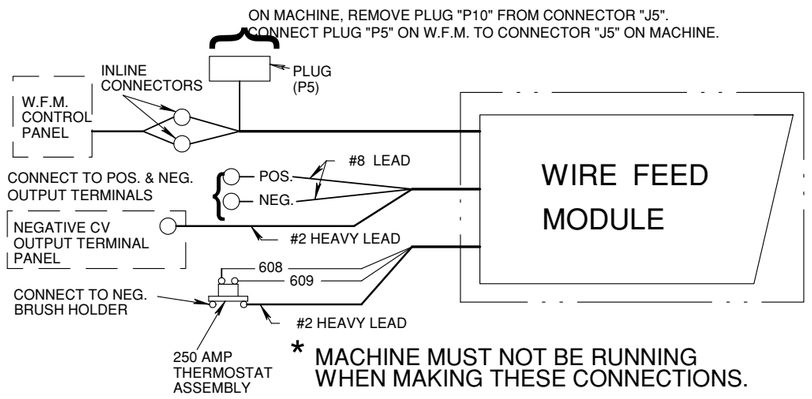

C

L11865

NOTE: This diagram is for reference only. It may not be accurate for all machines covered by this manual. The wiring diagram specific to your code is pasted inside one of the enclosure panels of your machine.

Return to Section TOC
Return to Master TOC

WIRING DIAGRAM - (CODES 10912, 11135) (L11866)

CLASSIC 300G WIRING DIAGRAM

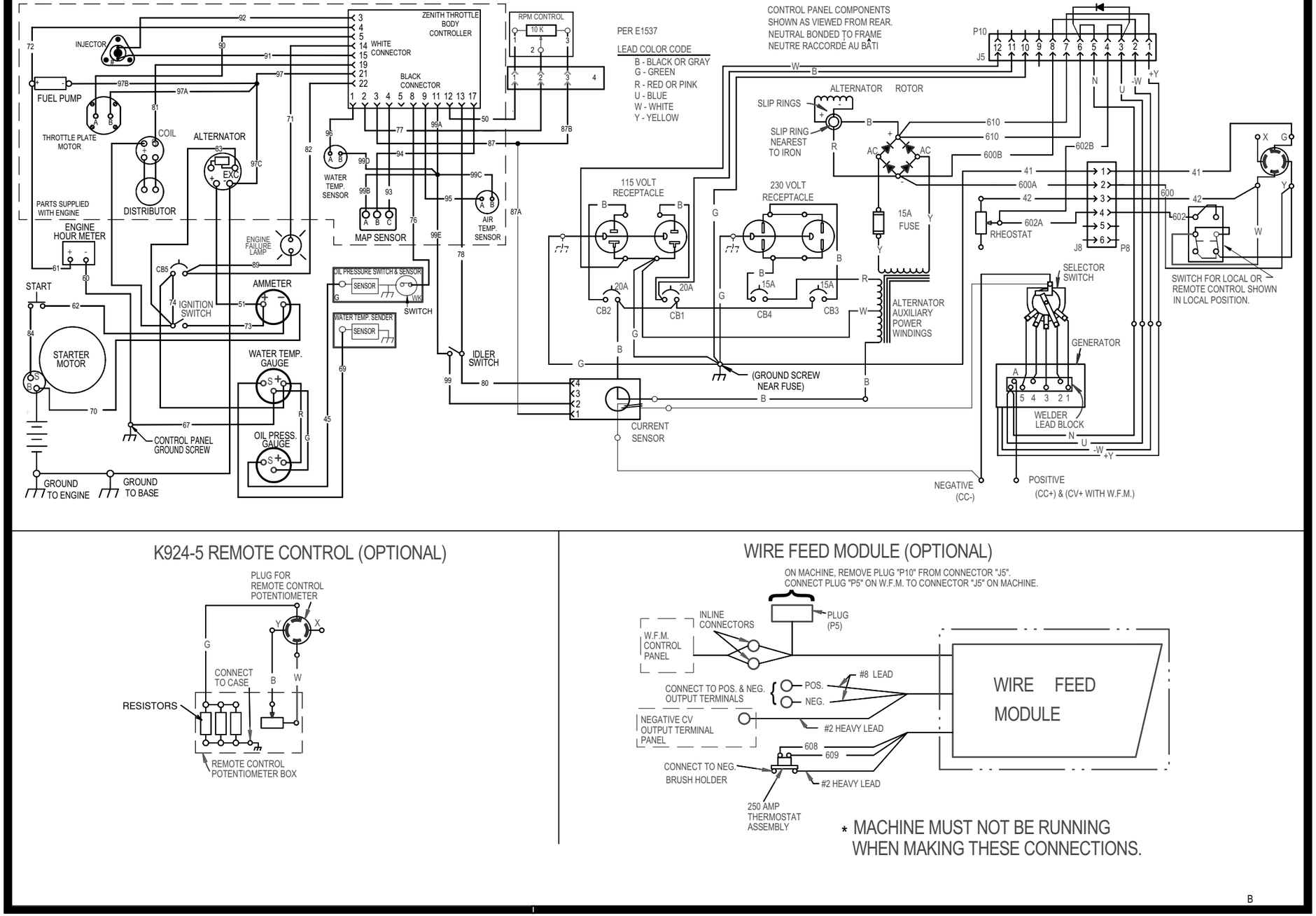

K924-5 REMOTE CONTROL (OPTIONAL)

WIRE FEED MODULE (OPTIONAL)

B

L11866

NOTE: This diagram is for reference only. It may not be accurate for all machines covered by this manual. The wiring diagram specific to your code is pasted inside one of the enclosure panels of your machine.

Return to Section TOC
Return to Master TOC

Return to Section TOC
Return to Master TOC

WIRING DIAGRAM - (CODES 11110, 11111) (M20499)

CLASSIC 300D PERKINS WIRING DIAGRAM

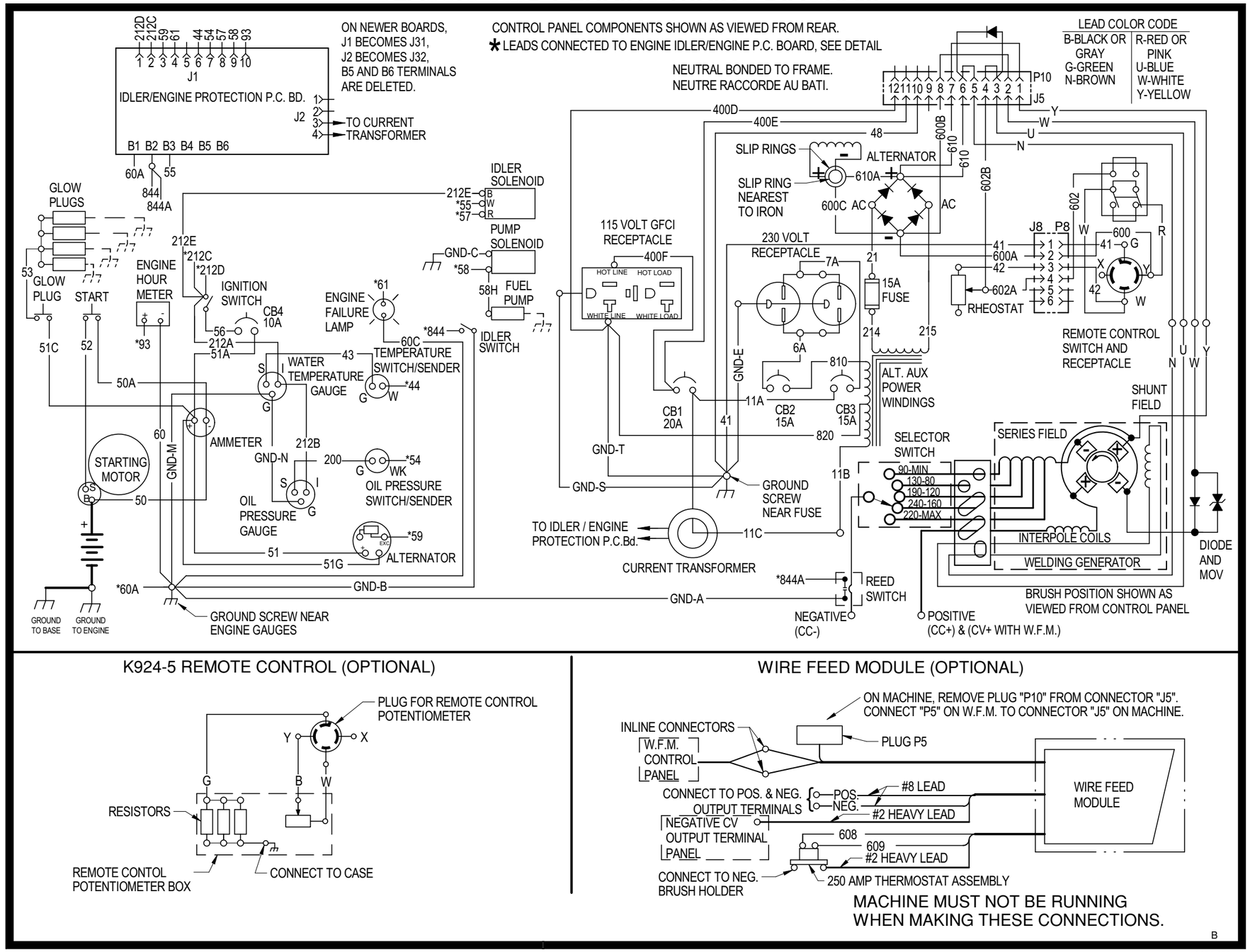

NOTE: This diagram is for reference only. It may not be accurate for all machines covered by this manual. The wiring diagram specific to your code is pasted inside one of the enclosure panels of your machine.

CLASSIC 300D KUBOTA WIRING DIAGRAM

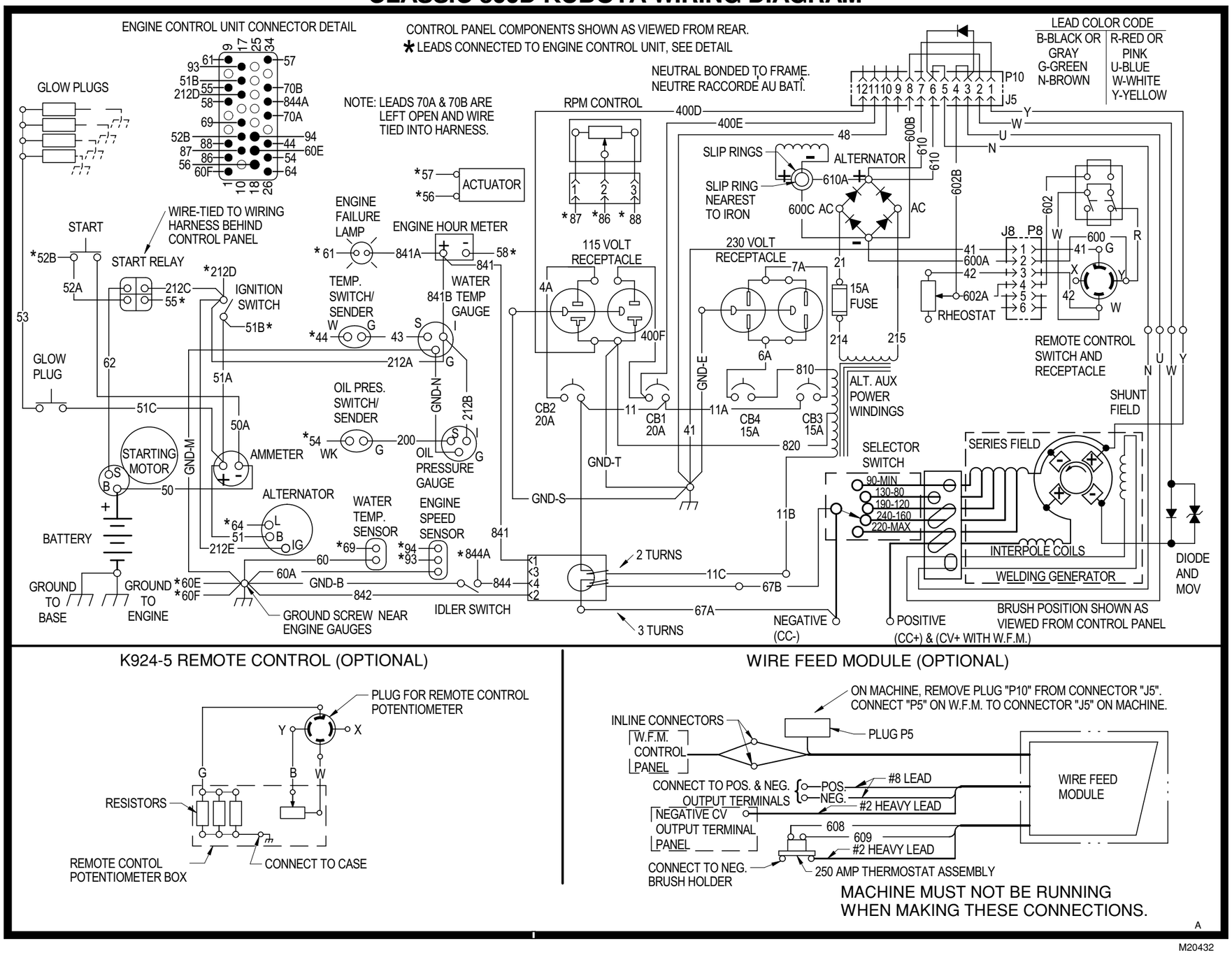

NOTE: This diagram is for reference only. It may not be accurate for all machines covered by this manual. The wiring diagram specific to your code is pasted inside one of the enclosure panels of your machine.

CLASSIC 300D KUBOTA WIRING DIAGRAM

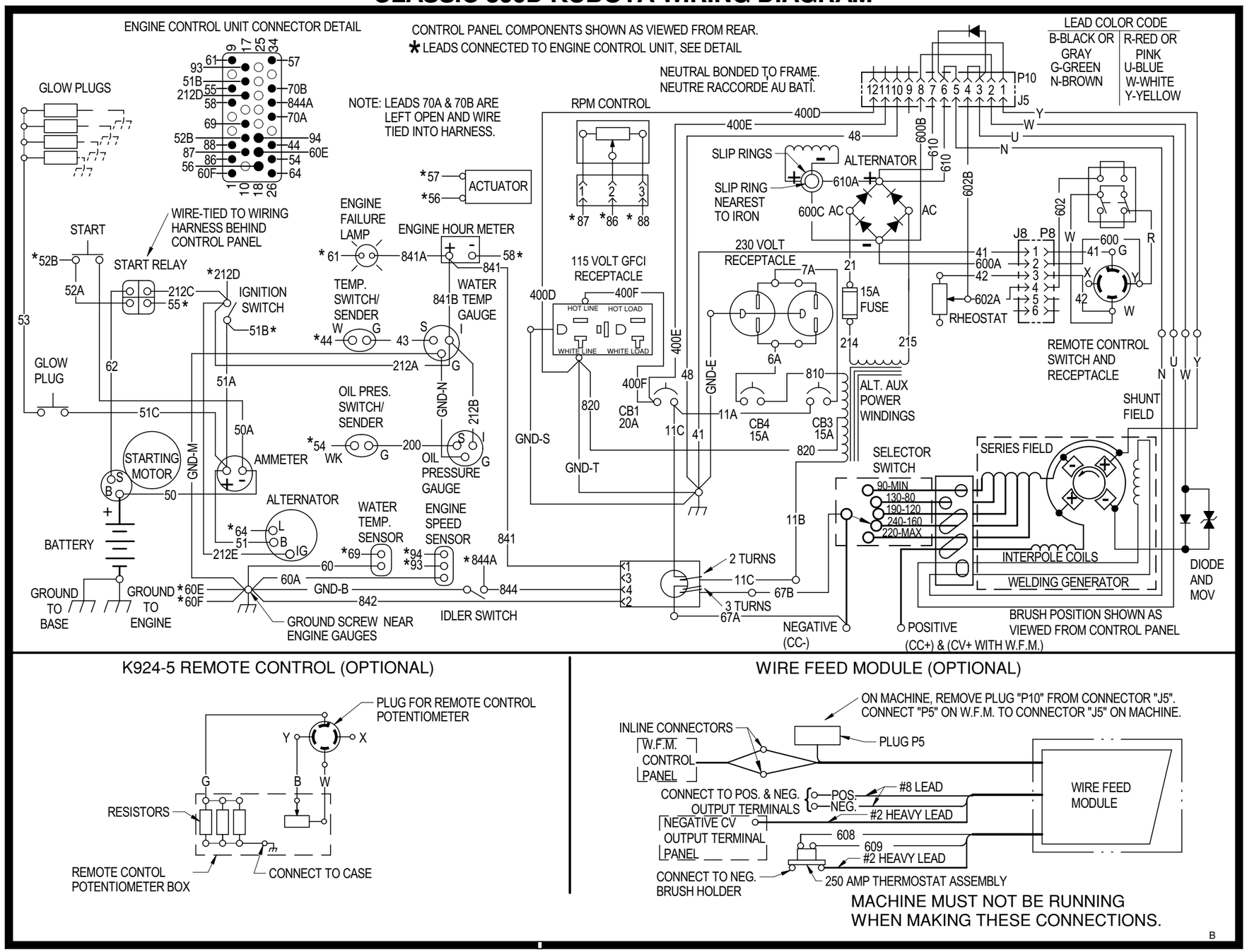

NOTE: This diagram is for reference only. It may not be accurate for all machines covered by this manual. The wiring diagram specific to your code is pasted inside one of the enclosure panels of your machine.

Return to Section TOC
Return to Master TOC

WIRING DIAGRAM - (CODES 11248, 11249, 11280, 11281) (M20616)

CLASSIC 300D PERKINS WIRING DIAGRAM

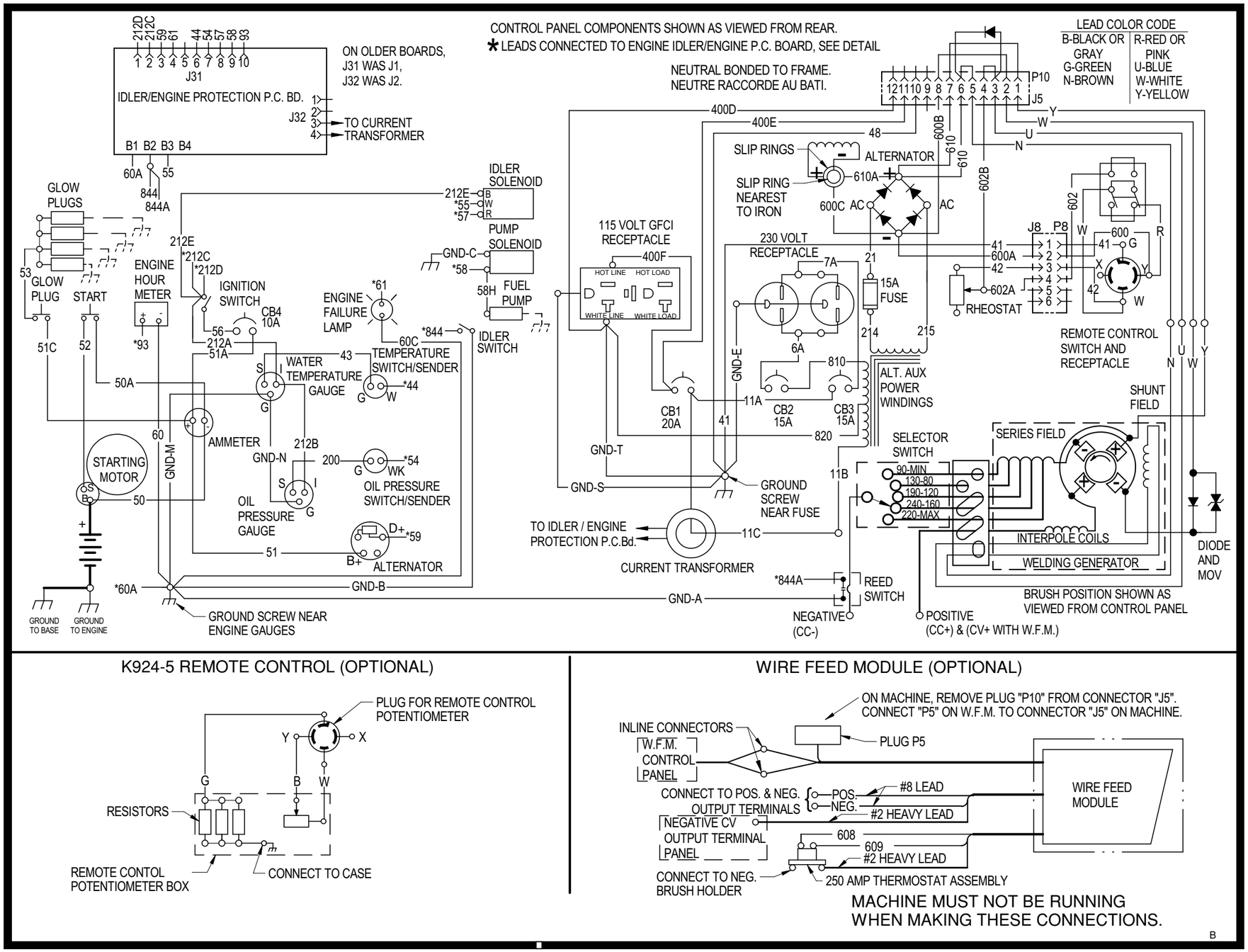

NOTE: This diagram is for reference only. It may not be accurate for all machines covered by this manual. The wiring diagram specific to your code is pasted inside one of the enclosure panels of your machine.

Return to Section TOC
Return to Master TOC

CLASSIC 300D PERKINS WIRING DIAGRAM

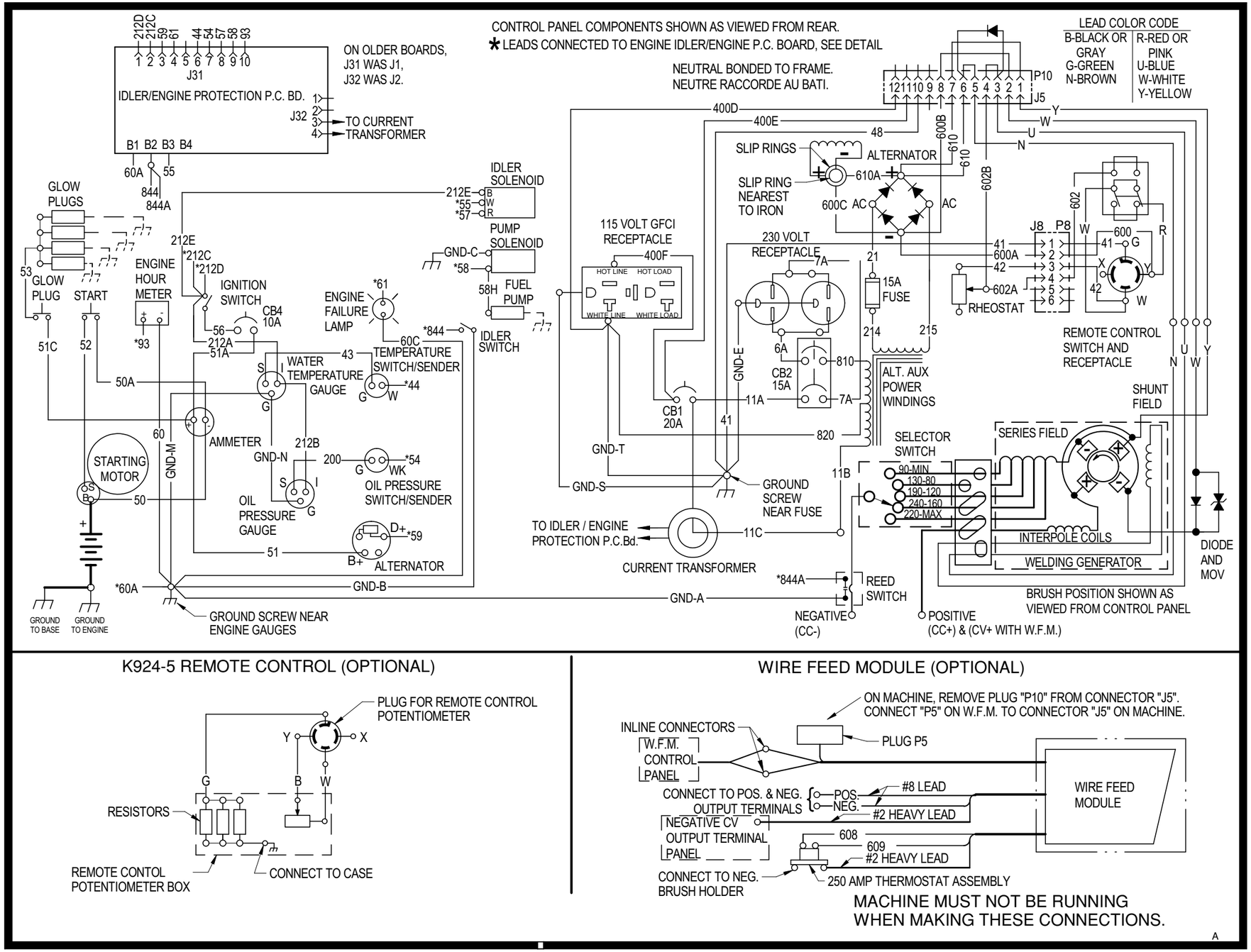

NOTE: This diagram is for reference only. It may not be accurate for all machines covered by this manual. The wiring diagram specific to your code is pasted inside one of the enclosure panels of your machine.

Return to Section TOC
Return to Master TOC

CLASSIC 300D KUBOTA WIRING DIAGRAM

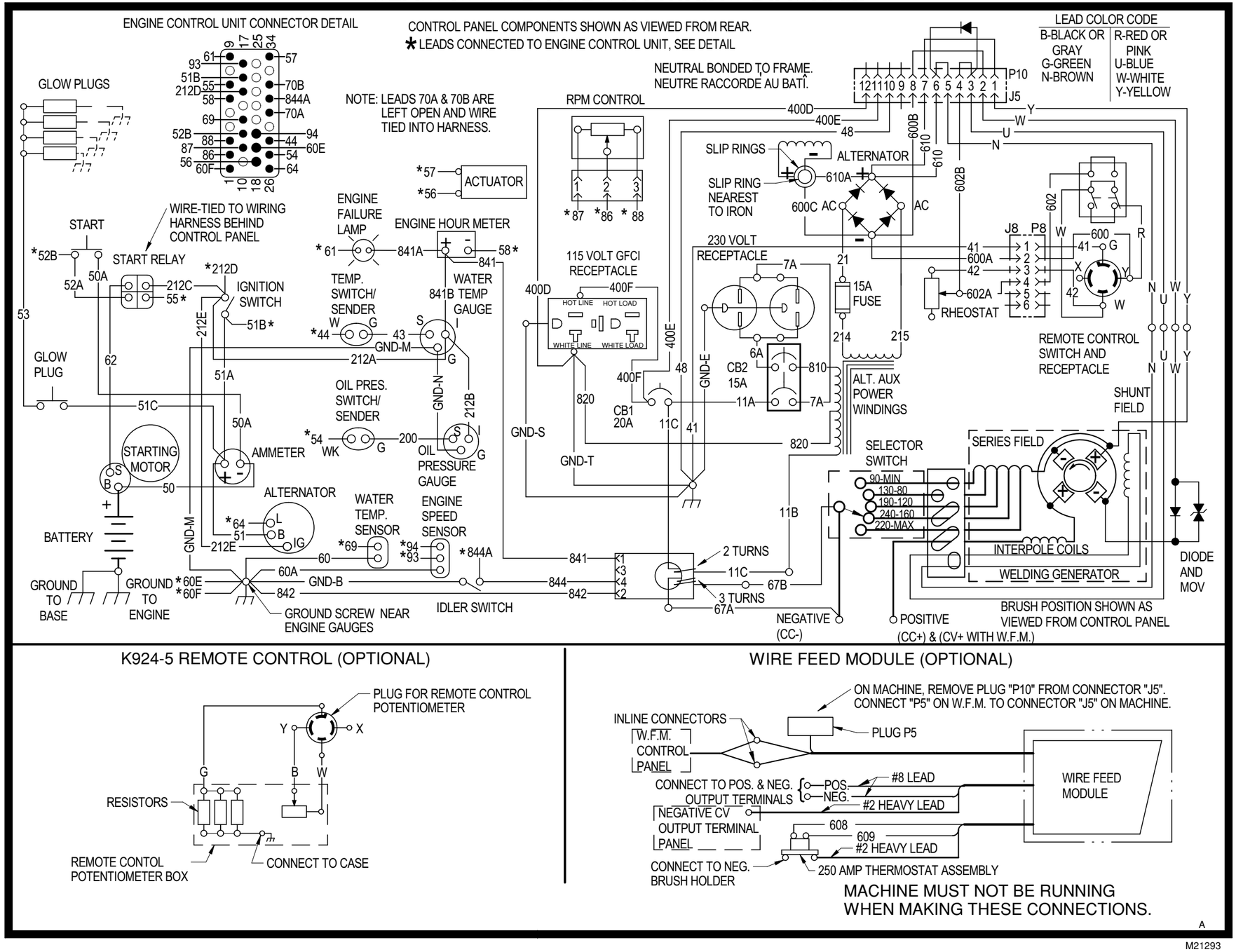

NOTE: This diagram is for reference only. It may not be accurate for all machines covered by this manual. The wiring diagram specific to your code is pasted inside one of the enclosure panels of your machine.

Return to Section TOC
Return to Master TOC

WIRING DIAGRAM - (CODES 11472, 11473) (M21684)

CLASSIC 300D PERKINS WIRING DIAGRAM

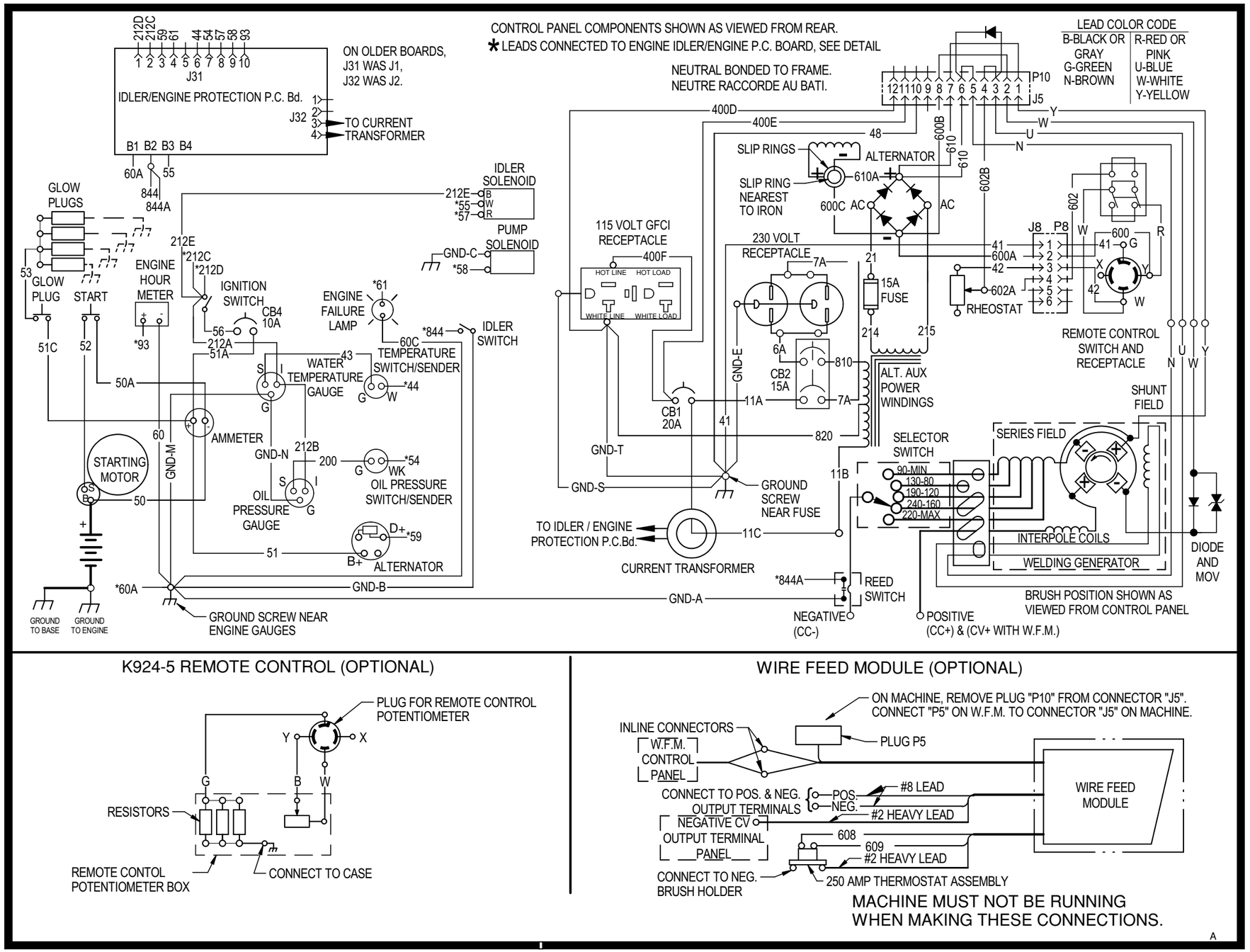

NOTE: This diagram is for reference only. It may not be accurate for all machines covered by this manual. The wiring diagram specific to your code is pasted inside one of the enclosure panels of your machine.

CLASSIC 300D KUBOTA WIRING DIAGRAM

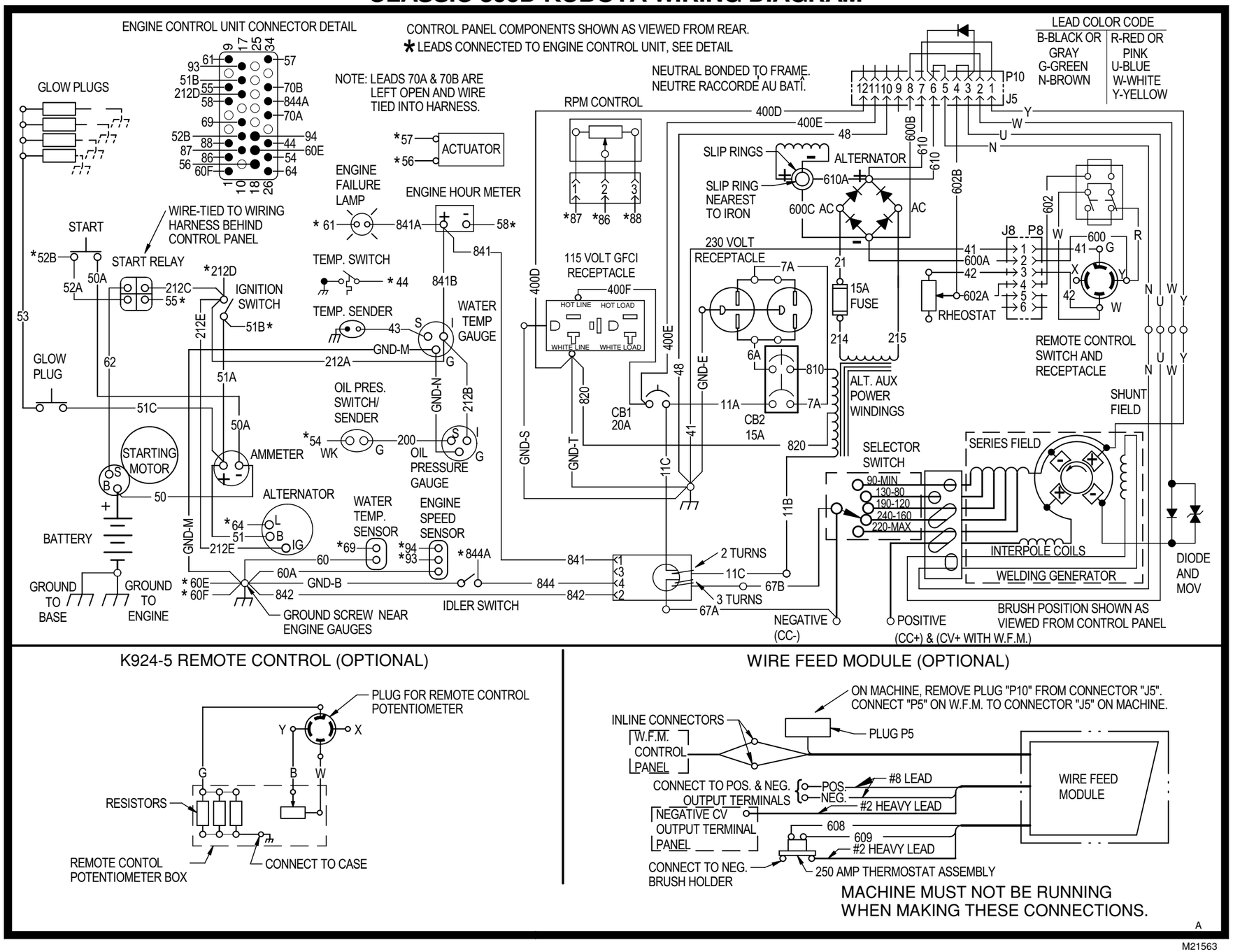

NOTE: This diagram is for reference only. It may not be accurate for all machines covered by this manual. The wiring diagram specific to your code is pasted inside one of the enclosure panels of your machine.

SCHEMATIC - COMPLETE MACHINE - (CODES 11110, 11111) (L12412)

L12412 | ENGINEERING CONTROLLED | MANUFACTURER: No | CHANGE DETAIL: SLIP RINGS, CHANGED POSITIVE TO NEGATIVE

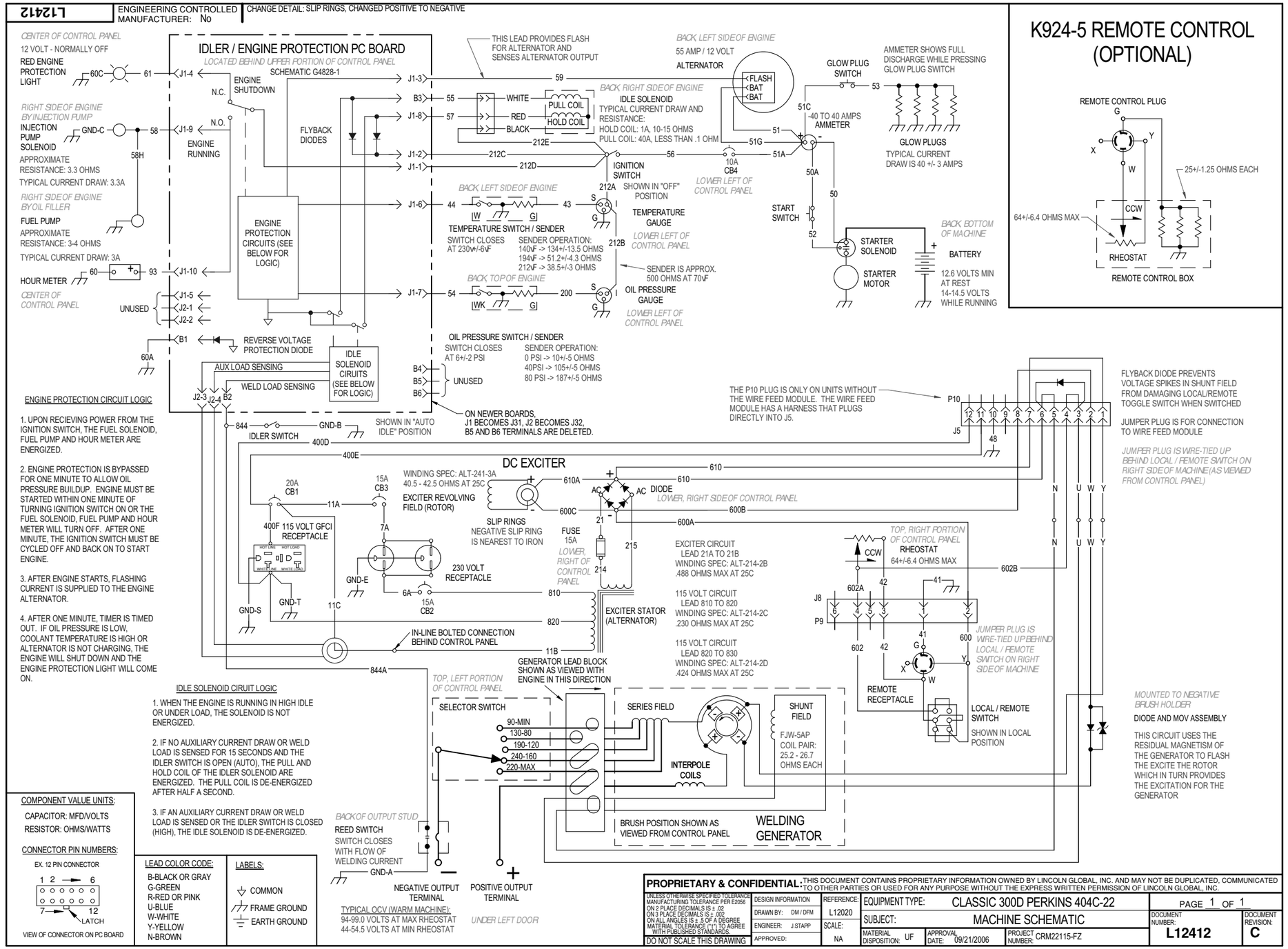

PROPRIETARY & CONFIDENTIAL. THIS DOCUMENT CONTAINS PROPRIETARY INFORMATION OWNED BY LINCOLN GLOBAL, INC. AND MAY NOT BE DUPLICATED, COMMUNICATED TO OTHER PARTIES OR USED FOR ANY PURPOSE WITHOUT THE EXPRESS WRITTEN PERMISSION OF LINCOLN GLOBAL, INC.

UNLESS OTHERWISE SPECIFIED TOLERANCE MANUFACTURING TOLERANCE PER E2056 ON 2 PLACE DECIMALS IS ± .02 ON 3 PLACE DECIMALS IS ± .002 ON ALL ANGLES IS ± .5 OF A DEGREE MATERIAL TOLERANCE (T) TO AGREE WITH PUBLISHED STANDARDS. DO NOT SCALE THIS DRAWING	DESIGN INFORMATION	REFERENCE:	EQUIPMENT TYPE: CLASSIC 300D PERKINS 404C-22	PAGE 1 OF 1	
	DRAWN BY: DM / DFM	L12020	SUBJECT: MACHINE SCHEMATIC	DOCUMENT NUMBER: L12412	DOCUMENT REVISION: C
	ENGINEER: J.STAPP	SCALE: NA			
	APPROVED:		MATERIAL DISPOSITION: UF APPROVAL DATE: 09/21/2006 PROJECT NUMBER: CRM22115-FZ		

NOTE: This diagram is for reference only. It may not be accurate for all machines covered by this manual.

Return to Section TOC
Return to Master TOC
Return to Section TOC
Return to Master TOC
Return to Section TOC
Return to Master TOC

SCHEMATIC - COMPLETE MACHINE - (CODES 11112, 11113) (L12265)

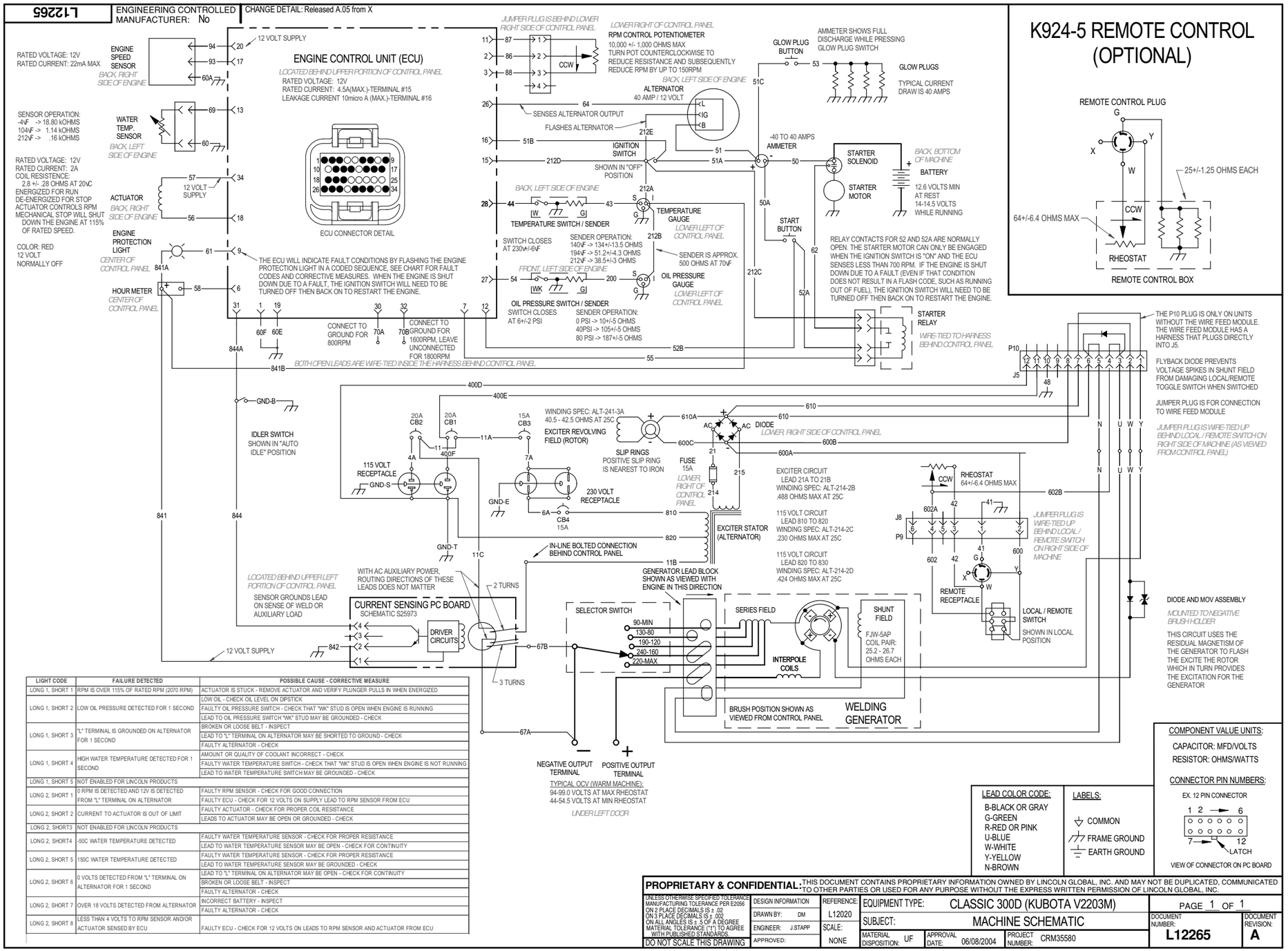

LIGHT CODE	FAILURE DETECTED	POSSIBLE CAUSE - CORRECTIVE MEASURE
LONG 1, SHORT 1	RPM IS OVER 115% OF RATED RPM (2070 RPM)	ACTUATOR IS STUCK - REMOVE ACTUATOR AND VERIFY PLUNGER PULLS IN WHEN ENERGIZED
LONG 1, SHORT 2	LOW OIL PRESSURE DETECTED FOR 1 SECOND	LOW OIL - CHECK OIL LEVEL ON DIPSTICK
		FAULTY OIL PRESSURE SWITCH - CHECK THAT "WK" STUD IS OPEN WHEN ENGINE IS RUNNING
		LEAD TO OIL PRESSURE SWITCH "WK" STUD MAY BE GROUNDED - CHECK
LONG 1, SHORT 3	"L" TERMINAL IS GROUNDED ON ALTERNATOR FOR 1 SECOND	BROKEN OR LOOSE BELT - INSPECT
		LEAD TO "L" TERMINAL ON ALTERNATOR MAY BE SHORTED TO GROUND - CHECK
		FAULTY ALTERNATOR - CHECK
LONG 1, SHORT 4	HIGH WATER TEMPERATURE DETECTED FOR 1 SECOND	AMOUNT OR QUALITY OF COOLANT INCORRECT - CHECK
		FAULTY WATER TEMPERATURE SWITCH - CHECK THAT "WK" STUD IS OPEN WHEN ENGINE IS NOT RUNNING
		LEAD TO WATER TEMPERATURE SWITCH MAY BE GROUNDED - CHECK
LONG 1, SHORT 5	NOT ENABLED FOR LINCOLN PRODUCTS	
LONG 2, SHORT 1	0 RPM IS DETECTED AND 12V IS DETECTED FROM "L" TERMINAL ON ALTERNATOR	FAULTY RPM SENSOR - CHECK FOR GOOD CONNECTION
		FAULTY ECU - CHECK FOR 12 VOLTS ON SUPPLY LEAD TO RPM SENSOR FROM ECU
LONG 2, SHORT 2	CURRENT TO ACTUATOR IS OUT OF LIMIT	FAULTY ACTUATOR - CHECK FOR PROPER COIL RESISTANCE
		LEADS TO ACTUATOR MAY BE OPEN OR GROUNDED - CHECK
LONG 2, SHORT3	NOT ENABLED FOR LINCOLN PRODUCTS	
LONG 2, SHORT4	-50C WATER TEMPERATURE DETECTED	FAULTY WATER TEMPERATURE SENSOR - CHECK FOR PROPER RESISTANCE
		LEAD TO WATER TEMPERATURE SENSOR MAY BE OPEN - CHECK FOR CONTINUITY
LONG 2, SHORT 5	150C WATER TEMPERATURE DETECTED	FAULTY WATER TEMPERATURE SENSOR - CHECK FOR PROPER RESISTANCE
		LEAD TO WATER TEMPERATURE SENSOR MAY BE GROUNDED - CHECK
LONG 2, SHORT 6	0 VOLTS DETECTED FROM "L" TERMINAL ON ALTERNATOR FOR 1 SECOND	LEAD TO "L" TERMINAL ON ALTERNATOR MAY BE OPEN - CHECK FOR CONTINUITY
		BROKEN OR LOOSE BELT - INSPECT
		FAULTY ALTERNATOR - CHECK
LONG 2, SHORT 7	OVER 18 VOLTS DETECTED FROM ALTERNATOR	INCORRECT BATTERY - INSPECT
		FAULTY ALTERNATOR - CHECK
LONG 2, SHORT 8	LESS THAN 4 VOLTS TO RPM SENSOR AND/OR ACTUATOR SENSED BY ECU	FAULTY ECU - CHECK FOR 12 VOLTS ON LEADS TO RPM SENSOR AND ACTUATOR FROM ECU

LEAD COLOR CODE:
B-BLACK OR GRAY
G-GREEN
R-RED OR PINK
U-BLUE
W-WHITE
Y-YELLOW
N-BROWN

LABELS:
COMMON
FRAME GROUND
EARTH GROUND

COMPONENT VALUE UNITS:
CAPACITOR: MFD/VOLTS
RESISTOR: OHMS/WATTS

CONNECTOR PIN NUMBERS:
EX. 12 PIN CONNECTOR
1 2 6
7 12
LATCH
VIEW OF CONNECTOR ON PC BOARD

PROPRIETARY & CONFIDENTIAL. THIS DOCUMENT CONTAINS PROPRIETARY INFORMATION OWNED BY LINCOLN GLOBAL, INC. AND MAY NOT BE DUPLICATED, COMMUNICATED TO OTHER PARTIES OR USED FOR ANY PURPOSE WITHOUT THE EXPRESS WRITTEN PERMISSION OF LINCOLN GLOBAL, INC.

UNLESS OTHERWISE SPECIFIED TOLERANCE MANUFACTURING TOLERANCE PER E2056
ON 2 PLACE DECIMALS IS ± .02
ON 3 PLACE DECIMALS IS ± .002
ON ALL ANGLES IS ± .5 OF A DEGREE
MATERIAL TOLERANCE (11) TO AGREE WITH PUBLISHED STANDARDS.
DO NOT SCALE THIS DRAWING

DESIGN INFORMATION		REFERENCE:	L12020
DRAWN BY:	DM		
ENGINEER:	J.STAPP	SCALE:	NONE
APPROVED:			

EQUIPMENT TYPE:	CLASSIC 300D (KUBOTA V2203M)	PAGE 1 OF 1	
SUBJECT:	MACHINE SCHEMATIC	DOCUMENT NUMBER:	DOCUMENT REVISION:
MATERIAL DISPOSITION: UF	APPROVAL DATE: 06/08/2004	PROJECT NUMBER: CRM35580	L12265 A

NOTE: This diagram is for reference only. It may not be accurate for all machines covered by this manual.

Return to Section TOC
Return to Master TOC

SCHEMATIC - COMPLETE MACHINE - (CODES 11243, 11244) (L12265-1)

L12265-1 | ENGINEERING CONTROLLED | MANUFACTURER: No | CHANGE DETAIL: New

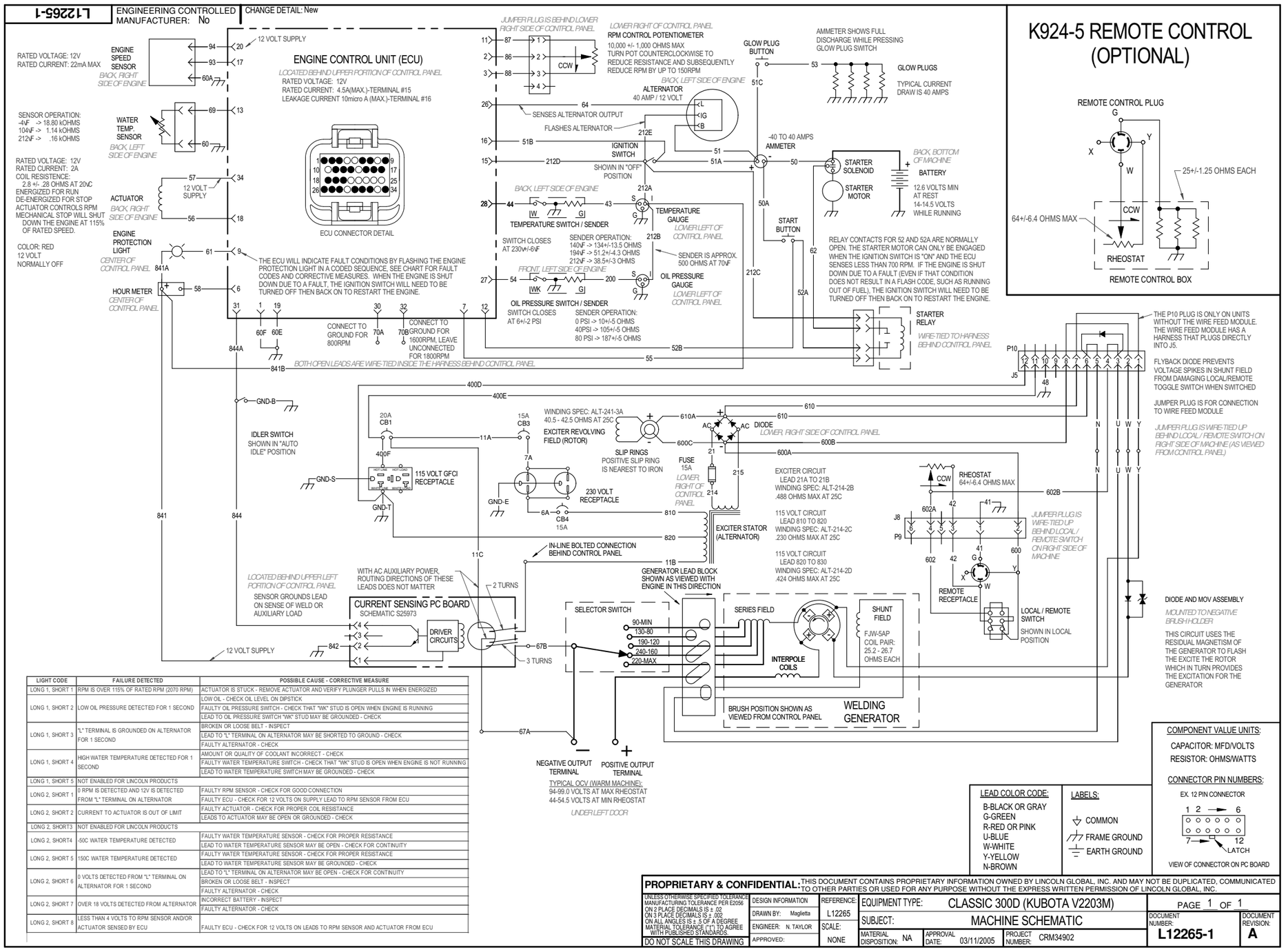

LIGHT CODE	FAILURE DETECTED	POSSIBLE CAUSE - CORRECTIVE MEASURE
LONG 1, SHORT 1	RPM IS OVER 115% OF RATED RPM (2070 RPM)	ACTUATOR IS STUCK - REMOVE ACTUATOR AND VERIFY PLUNGER PULLS IN WHEN ENERGIZED
LONG 1, SHORT 2	LOW OIL PRESSURE DETECTED FOR 1 SECOND	LOW OIL - CHECK OIL LEVEL ON DIPSTICK
		FAULTY OIL PRESSURE SWITCH - CHECK THAT "WK" STUD IS OPEN WHEN ENGINE IS RUNNING
		LEAD TO OIL PRESSURE SWITCH "WK" STUD MAY BE GROUNDED - CHECK
LONG 1, SHORT 3	"L" TERMINAL IS GROUNDED ON ALTERNATOR FOR 1 SECOND	BROKEN OR LOOSE BELT - INSPECT
		LEAD TO "L" TERMINAL ON ALTERNATOR MAY BE SHORTED TO GROUND - CHECK
		FAULTY ALTERNATOR - CHECK
LONG 1, SHORT 4	HIGH WATER TEMPERATURE DETECTED FOR 1 SECOND	AMOUNT OR QUALITY OF COOLANT INCORRECT - CHECK
		FAULTY WATER TEMPERATURE SWITCH - CHECK THAT "WK" STUD IS OPEN WHEN ENGINE IS NOT RUNNING
		LEAD TO WATER TEMPERATURE SWITCH MAY BE GROUNDED - CHECK
LONG 1, SHORT 5	NOT ENABLED FOR LINCOLN PRODUCTS	
LONG 2, SHORT 1	0 RPM IS DETECTED AND 12V IS DETECTED FROM "L" TERMINAL ON ALTERNATOR	FAULTY RPM SENSOR - CHECK FOR GOOD CONNECTION
		FAULTY ECU - CHECK FOR 12 VOLTS ON SUPPLY LEAD TO RPM SENSOR FROM ECU
LONG 2, SHORT 2	CURRENT TO ACTUATOR IS OUT OF LIMIT	FAULTY ACTUATOR - CHECK FOR PROPER COIL RESISTANCE
		LEADS TO ACTUATOR MAY BE OPEN OR GROUNDED - CHECK
LONG 2, SHORT3	NOT ENABLED FOR LINCOLN PRODUCTS	
LONG 2, SHORT4	-50C WATER TEMPERATURE DETECTED	FAULTY WATER TEMPERATURE SENSOR - CHECK FOR PROPER RESISTANCE
		LEAD TO WATER TEMPERATURE SENSOR MAY BE OPEN - CHECK FOR CONTINUITY
LONG 2, SHORT 5	150C WATER TEMPERATURE DETECTED	FAULTY WATER TEMPERATURE SENSOR - CHECK FOR PROPER RESISTANCE
		LEAD TO WATER TEMPERATURE SENSOR MAY BE GROUNDED - CHECK
LONG 2, SHORT 6	0 VOLTS DETECTED FROM "L" TERMINAL ON ALTERNATOR FOR 1 SECOND	LEAD TO "L" TERMINAL ON ALTERNATOR MAY BE OPEN - CHECK FOR CONTINUITY
		BROKEN OR LOOSE BELT - INSPECT
		FAULTY ALTERNATOR - CHECK
LONG 2, SHORT 7	OVER 18 VOLTS DETECTED FROM ALTERNATOR	INCORRECT BATTERY - INSPECT
		FAULTY ALTERNATOR - CHECK
LONG 2, SHORT 8	LESS THAN 4 VOLTS TO RPM SENSOR AND/OR ACTUATOR SENSED BY ECU	FAULTY ECU - CHECK FOR 12 VOLTS ON LEADS TO RPM SENSOR AND ACTUATOR FROM ECU

PROPRIETARY & CONFIDENTIAL: THIS DOCUMENT CONTAINS PROPRIETARY INFORMATION OWNED BY LINCOLN GLOBAL, INC. AND MAY NOT BE DUPLICATED, COMMUNICATED TO OTHER PARTIES OR USED FOR ANY PURPOSE WITHOUT THE EXPRESS WRITTEN PERMISSION OF LINCOLN GLOBAL, INC.

UNLESS OTHERWISE SPECIFIED TOLERANCE MANUFACTURING TOLERANCE PER E2056
ON 2 PLACE DECIMALS IS ± .02
ON 3 PLACE DECIMALS IS ± .002
ON ALL ANGLES IS ± .5 OF A DEGREE
MATERIAL TOLERANCE (T) TO AGREE WITH PUBLISHED STANDARDS.
DO NOT SCALE THIS DRAWING

DESIGN INFORMATION	
DRAWN BY: Maglietta	REFERENCE: L12265
ENGINEER: N. TAYLOR	SCALE: NONE
APPROVED:	
EQUIPMENT TYPE:	CLASSIC 300D (KUBOTA V2203M)
SUBJECT:	MACHINE SCHEMATIC
MATERIAL DISPOSITION: NA	APPROVAL DATE: 03/11/2005
PROJECT NUMBER:	CRM34902
PAGE 1 OF 1	
DOCUMENT NUMBER:	L12265-1
DOCUMENT REVISION:	A

NOTE: This diagram is for reference only. It may not be accurate for all machines covered by this manual.

Return to Section TOC
Return to Master TOC
Return to Section TOC
Return to Master TOC
Return to Section TOC
Return to Master TOC

SCHEMATIC - COMPLETE MACHINE - (CODES 11248, 11249, 11280, 11281) (L12561)

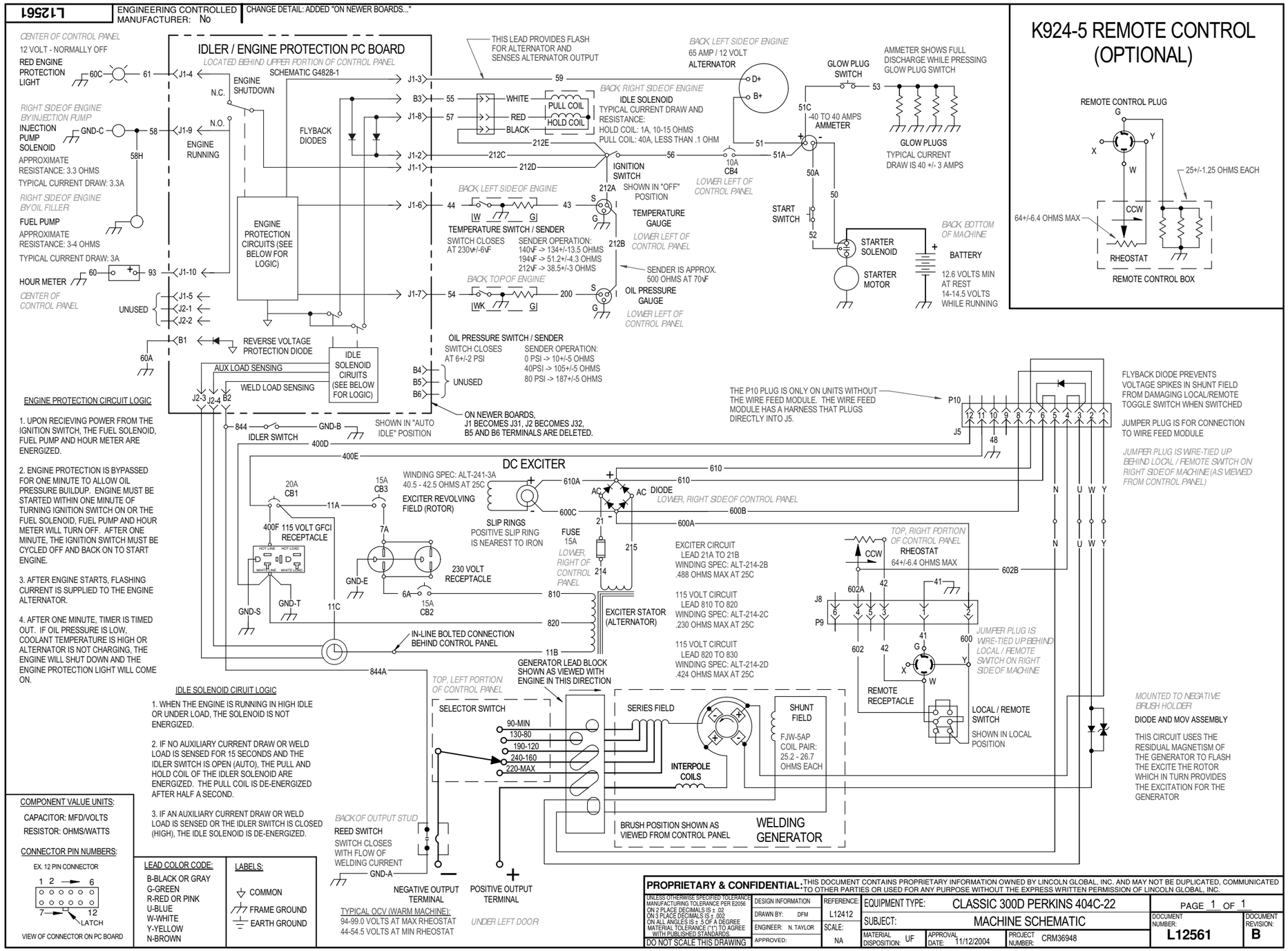

NOTE: This diagram is for reference only. It may not be accurate for all machines covered by this manual.

SCHEMATIC - COMPLETE MACHINE - (CODES 11411, 11412) (L13096)

L13096 | ENGINEERING CONTROLLED | MANUFACTURER: No | CHANGE DETAIL: New

IDLER / ENGINE PROTECTION PC BOARD — LOCATED BEHIND UPPER PORTION OF CONTROL PANEL — SCHEMATIC G4828-1

CENTER OF CONTROL PANEL
12 VOLT - NORMALLY OFF
RED ENGINE PROTECTION LIGHT — 60C — 61 — J1-4
ENGINE SHUTDOWN — N.C. — N.O. — J1-9
ENGINE RUNNING
RIGHT SIDE OF ENGINE BY INJECTION PUMP
INJECTION PUMP SOLENOID — GND-C — 58 — 58H
APPROXIMATE RESISTANCE: 3.3 OHMS
TYPICAL CURRENT DRAW: 3.3A
RIGHT SIDE OF ENGINE BY OIL FILLER
FUEL PUMP
APPROXIMATE RESISTANCE: 3-4 OHMS
TYPICAL CURRENT DRAW: 3A
HOUR METER — 60 — 93 — J1-10
CENTER OF CONTROL PANEL
UNUSED — J1-5, J2-1, J2-2
FLYBACK DIODES
ENGINE PROTECTION CIRCUITS (SEE BELOW FOR LOGIC)
B1 — REVERSE VOLTAGE PROTECTION DIODE — 60A
AUX LOAD SENSING — J2-3
WELD LOAD SENSING — J2-4 — B2
IDLE SOLENOID CIRUITS (SEE BELOW FOR LOGIC)
B3 — 55 — WHITE — PULL COIL
J1-8 — 57 — RED — HOLD COIL
BLACK
J1-2 — 212C
J1-1 — 212D
J1-3 — 59
THIS LEAD PROVIDES FLASH FOR ALTERNATOR AND SENSES ALTERNATOR OUTPUT
BACK, RIGHT SIDE OF ENGINE
IDLE SOLENOID
TYPICAL CURRENT DRAW AND RESISTANCE:
HOLD COIL: 1A, 10-15 OHMS
PULL COIL: 40A, LESS THAN .1 OHM
212E
BACK, LEFT SIDE OF ENGINE
65 AMP / 12 VOLT ALTERNATOR — D+ — B+
GLOW PLUG SWITCH — 53
AMMETER SHOWS FULL DISCHARGE WHILE PRESSING GLOW PLUG SWITCH
GLOW PLUGS
TYPICAL CURRENT DRAW IS 40 +/- 3 AMPS
51C — -40 TO 40 AMPS AMMETER — 51 — 51A
56 — IGNITION SWITCH — SHOWN IN "OFF" POSITION
10A CB4 — LOWER LEFT OF CONTROL PANEL
50A — START SWITCH — 50 — 52
STARTER SOLENOID — STARTER MOTOR
BACK, BOTTOM OF MACHINE
BATTERY — 12.6 VOLTS MIN AT REST — 14-14.5 VOLTS WHILE RUNNING
BACK, LEFT SIDE OF ENGINE
J1-6 — 44 — W — G — 43
TEMPERATURE SWITCH / SENDER
SWITCH CLOSES AT 230ºF +/-6ºF
SENDER OPERATION: 140ºF -> 134+/-13.5 OHMS; 194ºF -> 51.2+/-4.3 OHMS; 212ºF -> 38.5+/-3 OHMS
212A — TEMPERATURE GAUGE — LOWER LEFT OF CONTROL PANEL
212B — SENDER IS APPROX. 500 OHMS AT 70ºF
BACK, TOP OF ENGINE
J1-7 — 54 — WK — G — 200
OIL PRESSURE GAUGE — LOWER LEFT OF CONTROL PANEL
J1-10 — 93
OIL PRESSURE SWITCH / SENDER
SWITCH CLOSES AT 6+/-2 PSI
SENDER OPERATION: 0 PSI -> 10+/-5 OHMS; 40PSI -> 105+/-5 OHMS; 80 PSI -> 187+/-5 OHMS
B4, B5, B6 — UNUSED
ON NEWER BOARDS, J1 BECOMES J31, J2 BECOMES J32, B5 AND B6 TERMINALS ARE DELETED.
SHOWN IN "AUTO IDLE" POSITION
844 — IDLER SWITCH — GND-B
400D
400E

ENGINE PROTECTION CIRCUIT LOGIC

1. UPON RECIEVING POWER FROM THE IGNITION SWITCH, THE FUEL SOLENOID, FUEL PUMP AND HOUR METER ARE ENERGIZED.

2. ENGINE PROTECTION IS BYPASSED FOR ONE MINUTE TO ALLOW OIL PRESSURE BUILDUP. ENGINE MUST BE STARTED WITHIN ONE MINUTE OF TURNING IGNITION SWITCH ON OR THE FUEL SOLENOID, FUEL PUMP AND HOUR METER WILL TURN OFF. AFTER ONE MINUTE, THE IGNITION SWITCH MUST BE CYCLED OFF AND BACK ON TO START ENGINE.

3. AFTER ENGINE STARTS, FLASHING CURRENT IS SUPPLIED TO THE ENGINE ALTERNATOR.

4. AFTER ONE MINUTE, TIMER IS TIMED OUT. IF OIL PRESSURE IS LOW, COOLANT TEMPERATURE IS HIGH OR ALTERNATOR IS NOT CHARGING, THE ENGINE WILL SHUT DOWN AND THE ENGINE PROTECTION LIGHT WILL COME ON.

DC EXCITER
WINDING SPEC: ALT-241-3A
40.5 - 42.5 OHMS AT 25C
EXCITER REVOLVING FIELD (ROTOR) — 610A — 600C
SLIP RINGS — POSITIVE SLIP RING IS NEAREST TO IRON
AC DIODE — LOWER, RIGHT SIDE OF CONTROL PANEL
610 — 600B — 600A
FUSE 15A — 21 — 215 — 214
LOWER, RIGHT OF CONTROL PANEL
EXCITER STATOR (ALTERNATOR)
EXCITER CIRCUIT
LEAD 21A TO 21B
WINDING SPEC: ALT-214-2B
.488 OHMS MAX AT 25C
115 VOLT CIRCUIT
LEAD 810 TO 820
WINDING SPEC: ALT-214-2C
.230 OHMS MAX AT 25C
115 VOLT CIRCUIT
LEAD 820 TO 830
WINDING SPEC: ALT-214-2D
.424 OHMS MAX AT 25C
20A CB1 — 11A — 400F 115 VOLT GFCI RECEPTACLE — HOT LINE — HOT LOAD — NEUTRAL LINE — NEUTRAL LOAD — GND-S — 820 — GND-T
15A CB2 — 7A — 6A — 810 — GND-E — 230 VOLT RECEPTACLE
11C — IN-LINE BOLTED CONNECTION BEHIND CONTROL PANEL — 11B — 820 — 810
844A
TOP, RIGHT PORTION OF CONTROL PANEL
RHEOSTAT — CCW — 64+/-6.4 OHMS MAX — 602B
602A — 42 — 41 — J8 — P9
602 — 42 — 41 — G — X — W — Y — 600
JUMPER PLUG IS WIRE-TIED UP BEHIND LOCAL / REMOTE SWITCH ON RIGHT SIDE OF MACHINE
REMOTE RECEPTACLE
LOCAL / REMOTE SWITCH — SHOWN IN LOCAL POSITION
N — U — W — Y
MOUNTED TO NEGATIVE BRUSH HOLDER
DIODE AND MOV ASSEMBLY
THIS CIRCUIT USES THE RESIDUAL MAGNETISM OF THE GENERATOR TO FLASH THE EXCITE THE ROTOR WHICH IN TURN PROVIDES THE EXCITATION FOR THE GENERATOR

IDLE SOLENOID CIRUIT LOGIC

1. WHEN THE ENGINE IS RUNNING IN HIGH IDLE OR UNDER LOAD, THE SOLENOID IS NOT ENERGIZED.

2. IF NO AUXILIARY CURRENT DRAW OR WELD LOAD IS SENSED FOR 15 SECONDS AND THE IDLER SWITCH IS OPEN (AUTO), THE PULL AND HOLD COIL OF THE IDLER SOLENOID ARE ENERGIZED. THE PULL COIL IS DE-ENERGIZED AFTER HALF A SECOND.

3. IF AN AUXILIARY CURRENT DRAW OR WELD LOAD IS SENSED OR THE IDLER SWITCH IS CLOSED (HIGH), THE IDLE SOLENOID IS DE-ENERGIZED.

TOP, LEFT PORTION OF CONTROL PANEL
GENERATOR LEAD BLOCK SHOWN AS VIEWED WITH ENGINE IN THIS DIRECTION
SELECTOR SWITCH — 90-MIN — 130-80 — 190-120 — 240-160 — 220-MAX
SERIES FIELD — INTERPOLE COILS — SHUNT FIELD — FJW-5AP COIL PAIR: 25.2 - 26.7 OHMS EACH
BRUSH POSITION SHOWN AS VIEWED FROM CONTROL PANEL
WELDING GENERATOR
BACK OF OUTPUT STUD
REED SWITCH — SWITCH CLOSES WITH FLOW OF WELDING CURRENT — GND-A
NEGATIVE OUTPUT TERMINAL — POSITIVE OUTPUT TERMINAL
TYPICAL OCV (WARM MACHINE): 94-99.0 VOLTS AT MAX RHEOSTAT; 44-54.5 VOLTS AT MIN RHEOSTAT
UNDER LEFT DOOR

THE P10 PLUG IS ONLY ON UNITS WITHOUT THE WIRE FEED MODULE. THE WIRE FEED MODULE HAS A HARNESS THAT PLUGS DIRECTLY INTO J5.
P10 — 12 11 10 9 8 7 6 5 4 3 2 1 — J5 — 48

FLYBACK DIODE PREVENTS VOLTAGE SPIKES IN SHUNT FIELD FROM DAMAGING LOCAL/REMOTE TOGGLE SWITCH WHEN SWITCHED
JUMPER PLUG IS FOR CONNECTION TO WIRE FEED MODULE
JUMPER PLUG IS WIRE-TIED UP BEHIND LOCAL / REMOTE SWITCH ON RIGHT SIDE OF MACHINE (AS VIEWED FROM CONTROL PANEL)

K924-5 REMOTE CONTROL (OPTIONAL)

REMOTE CONTROL PLUG — G — X — Y — W
25+/-1.25 OHMS EACH
64+/-6.4 OHMS MAX — CCW — RHEOSTAT
REMOTE CONTROL BOX

COMPONENT VALUE UNITS:
CAPACITOR: MFD/VOLTS
RESISTOR: OHMS/WATTS

CONNECTOR PIN NUMBERS:
EX. 12 PIN CONNECTOR
1 2 → 6 / 7 → 12 LATCH
VIEW OF CONNECTOR ON PC BOARD

LEAD COLOR CODE:
B-BLACK OR GRAY
G-GREEN
R-RED OR PINK
U-BLUE
W-WHITE
Y-YELLOW
N-BROWN

LABELS:
COMMON
FRAME GROUND
EARTH GROUND

PROPRIETARY & CONFIDENTIAL - THIS DOCUMENT CONTAINS PROPRIETARY INFORMATION OWNED BY LINCOLN GLOBAL, INC. AND MAY NOT BE DUPLICATED, COMMUNICATED TO OTHER PARTIES OR USED FOR ANY PURPOSE WITHOUT THE EXPRESS WRITTEN PERMISSION OF LINCOLN GLOBAL, INC.

UNLESS OTHERWISE SPECIFIED TOLERANCE MANUFACTURING TOLERANCE PER E2056 ON 2 PLACE DECIMALS IS ± .02 ON 3 PLACE DECIMALS IS ± .002 ON ALL ANGLES IS ± .5 OF A DEGREE MATERIAL TOLERANCE ["t"] TO AGREE WITH PUBLISHED STANDARDS.
DO NOT SCALE THIS DRAWING

DESIGN INFORMATION	REFERENCE:
DRAWN BY: Magletta	L12561
ENGINEER: D. BENDER	SCALE:
APPROVED:	NA
MATERIAL DISPOSITION: NA	APPROVAL DATE: 10/05/2006
PROJECT NUMBER: CRM37529	

EQUIPMENT TYPE: CLASSIC 300D PERKINS 404C-22
SUBJECT: MACHINE SCHEMATIC
PAGE 1 OF 1
DOCUMENT NUMBER: L13096
DOCUMENT REVISION: A

NOTE: This diagram is for reference only. It may not be accurate for all machines covered by this manual.

Return to Section TOC
Return to Master TOC

SCHEMATIC - COMPLETE MACHINE - (CODES 11413, 11414) (L13097)

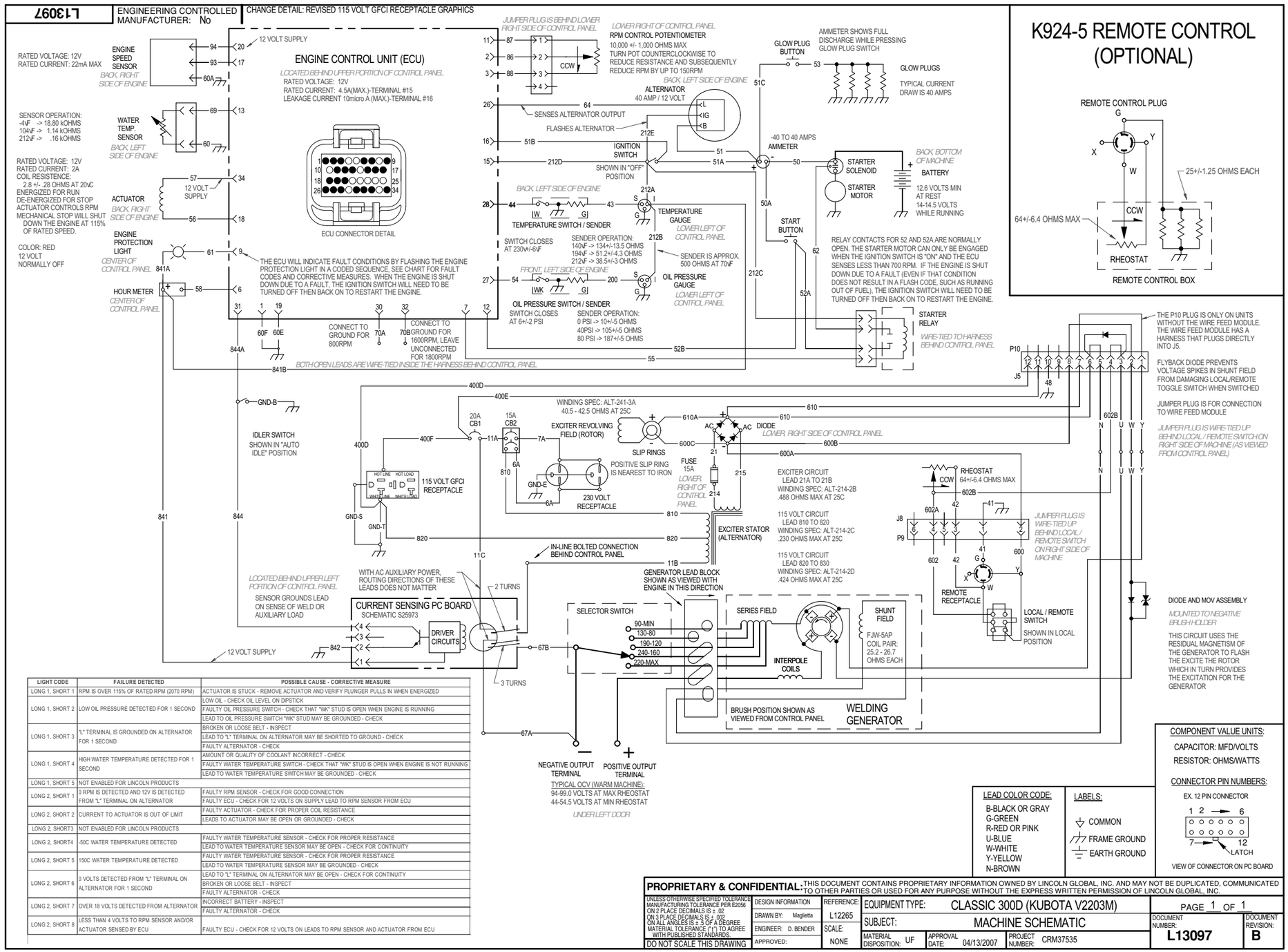

LIGHT CODE	FAILURE DETECTED	POSSIBLE CAUSE - CORRECTIVE MEASURE
LONG 1, SHORT 1	RPM IS OVER 115% OF RATED RPM (2070 RPM)	ACTUATOR IS STUCK - REMOVE ACTUATOR AND VERIFY PLUNGER PULLS IN WHEN ENERGIZED
LONG 1, SHORT 2	LOW OIL PRESSURE DETECTED FOR 1 SECOND	LOW OIL - CHECK OIL LEVEL ON DIPSTICK
		FAULTY OIL PRESSURE SWITCH - CHECK THAT "WK" STUD IS OPEN WHEN ENGINE IS RUNNING
		LEAD TO OIL PRESSURE SWITCH "WK" STUD MAY BE GROUNDED - CHECK
LONG 1, SHORT 3	"L" TERMINAL IS GROUNDED ON ALTERNATOR FOR 1 SECOND	BROKEN OR LOOSE BELT - INSPECT
		LEAD TO "L" TERMINAL ON ALTERNATOR MAY BE SHORTED TO GROUND - CHECK
		FAULTY ALTERNATOR - CHECK
LONG 1, SHORT 4	HIGH WATER TEMPERATURE DETECTED FOR 1 SECOND	AMOUNT OR QUALITY OF COOLANT INCORRECT - CHECK
		FAULTY WATER TEMPERATURE SWITCH - CHECK THAT "WK" STUD IS OPEN WHEN ENGINE IS NOT RUNNING
		LEAD TO WATER TEMPERATURE SWITCH MAY BE GROUNDED - CHECK
LONG 1, SHORT 5	NOT ENABLED FOR LINCOLN PRODUCTS	
LONG 2, SHORT 1	0 RPM IS DETECTED AND 12V IS DETECTED FROM "L" TERMINAL ON ALTERNATOR	FAULTY RPM SENSOR - CHECK FOR GOOD CONNECTION
		FAULTY ECU - CHECK FOR 12 VOLTS ON SUPPLY LEAD TO RPM SENSOR FROM ECU
LONG 2, SHORT 2	CURRENT TO ACTUATOR IS OUT OF LIMIT	FAULTY ACTUATOR - CHECK FOR PROPER COIL RESISTANCE
		LEADS TO ACTUATOR MAY BE OPEN OR GROUNDED - CHECK
LONG 2, SHORT3	NOT ENABLED FOR LINCOLN PRODUCTS	
LONG 2, SHORT4	-50C WATER TEMPERATURE DETECTED	FAULTY WATER TEMPERATURE SENSOR - CHECK FOR PROPER RESISTANCE
		LEAD TO WATER TEMPERATURE SENSOR MAY BE OPEN - CHECK FOR CONTINUITY
LONG 2, SHORT 5	150C WATER TEMPERATURE DETECTED	FAULTY WATER TEMPERATURE SENSOR - CHECK FOR PROPER RESISTANCE
		LEAD TO WATER TEMPERATURE SENSOR MAY BE GROUNDED - CHECK
LONG 2, SHORT 6	0 VOLTS DETECTED FROM "L" TERMINAL ON ALTERNATOR FOR 1 SECOND	LEAD TO "L" TERMINAL ON ALTERNATOR MAY BE OPEN - CHECK FOR CONTINUITY
		BROKEN OR LOOSE BELT - INSPECT
		FAULTY ALTERNATOR - CHECK
LONG 2, SHORT 7	OVER 18 VOLTS DETECTED FROM ALTERNATOR	INCORRECT BATTERY - INSPECT
		FAULTY ALTERNATOR - CHECK
LONG 2, SHORT 8	LESS THAN 4 VOLTS TO RPM SENSOR AND/OR ACTUATOR SENSED BY ECU	FAULTY ECU - CHECK FOR 12 VOLTS ON LEADS TO RPM SENSOR AND ACTUATOR FROM ECU

NOTE: This diagram is for reference only. It may not be accurate for all machines covered by this manual.

Return to Section TOC
Return to Master TOC
Return to Section TOC
Return to Master TOC
Return to Section TOC
Return to Master TOC

SCHEMATIC - COMPLETE MACHINE - (CODES 11472, 11473) (L13672)

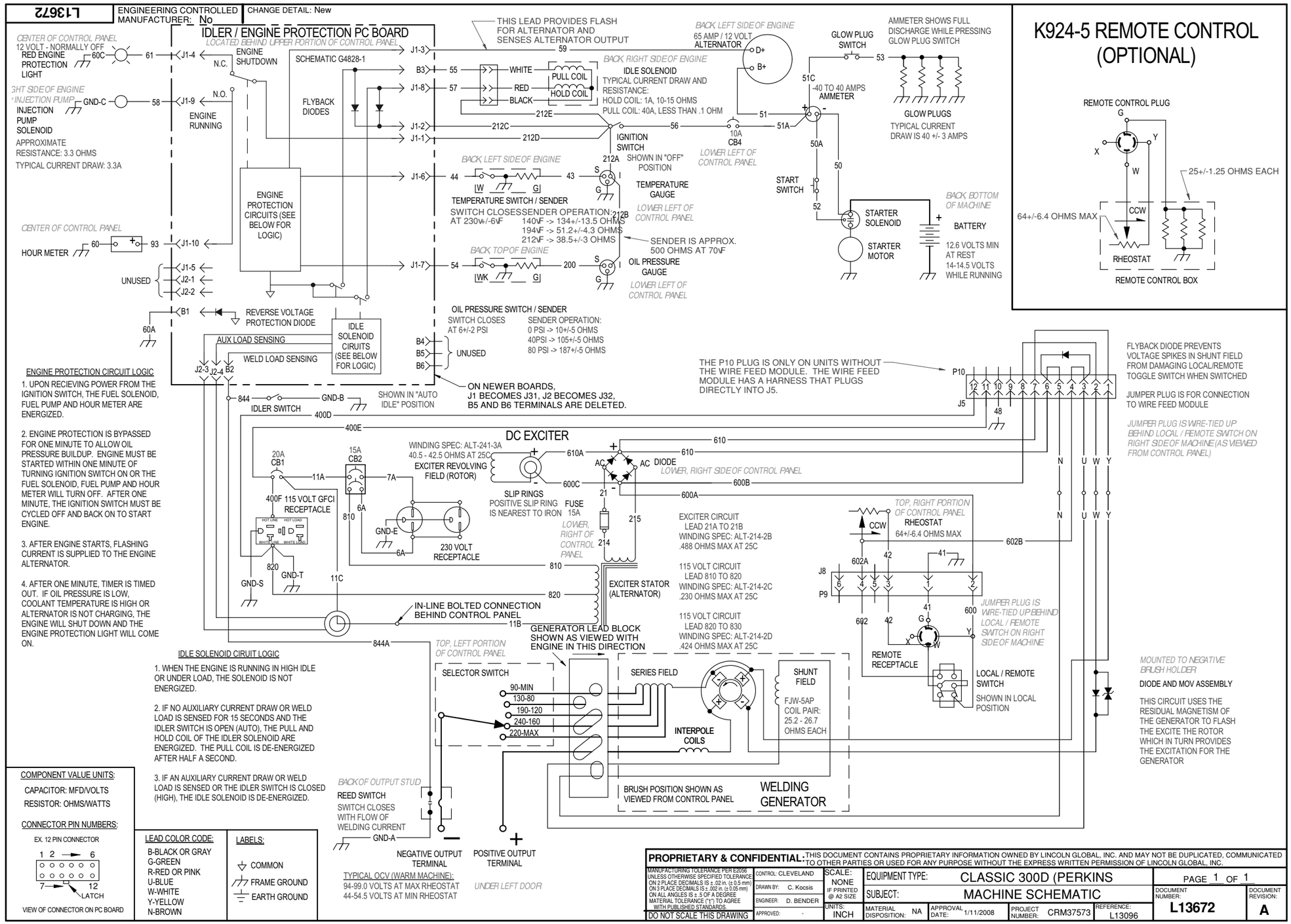

NOTE: This diagram is for reference only. It may not be accurate for all machines covered by this manual.

Return to Section TOC
Return to Master TOC

SCHEMATIC - COMPLETE MACHINE - (CODES 11474, 11475) (L13351)

L13351 | ENGINEERING CONTROLLED MANUFACTURER: No | CHANGE DETAIL: New

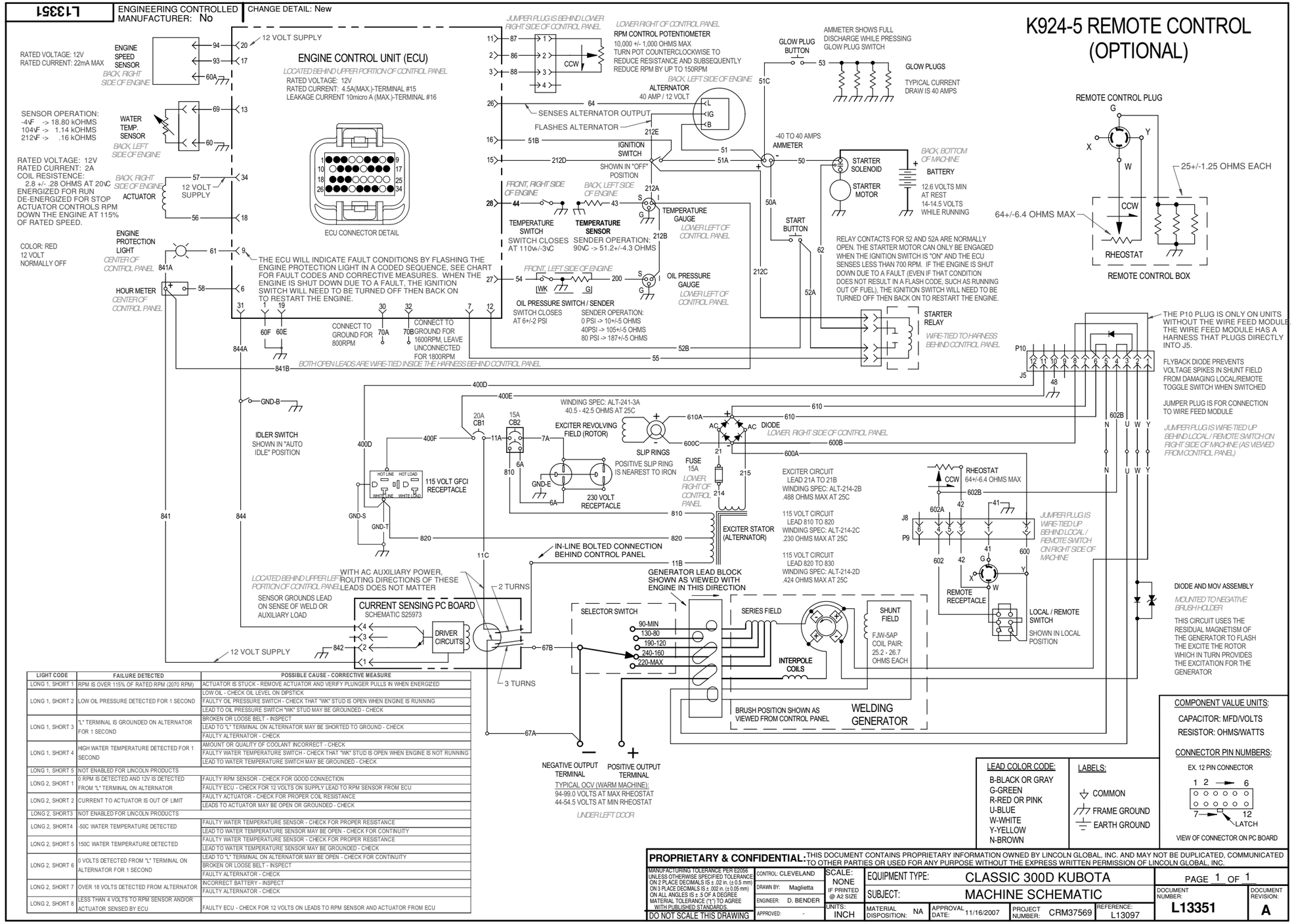

LIGHT CODE	FAILURE DETECTED	POSSIBLE CAUSE - CORRECTIVE MEASURE
LONG 1, SHORT 1	RPM IS OVER 115% OF RATED RPM (2070 RPM)	ACTUATOR IS STUCK - REMOVE ACTUATOR AND VERIFY PLUNGER PULLS IN WHEN ENERGIZED
LONG 1, SHORT 2	LOW OIL PRESSURE DETECTED FOR 1 SECOND	LOW OIL - CHECK OIL LEVEL ON DIPSTICK
		FAULTY OIL PRESSURE SWITCH - CHECK THAT "WK" STUD IS OPEN WHEN ENGINE IS RUNNING
		LEAD TO OIL PRESSURE SWITCH "WK" STUD MAY BE GROUNDED - CHECK
LONG 1, SHORT 3	"L" TERMINAL IS GROUNDED ON ALTERNATOR FOR 1 SECOND	BROKEN OR LOOSE BELT - INSPECT
		LEAD TO "L" TERMINAL ON ALTERNATOR MAY BE SHORTED TO GROUND - CHECK
		FAULTY ALTERNATOR - CHECK
LONG 1, SHORT 4	HIGH WATER TEMPERATURE DETECTED FOR 1 SECOND	AMOUNT OR QUALITY OF COOLANT INCORRECT - CHECK
		FAULTY WATER TEMPERATURE SWITCH - CHECK THAT "WK" STUD IS OPEN WHEN ENGINE IS NOT RUNNING
		LEAD TO WATER TEMPERATURE SWITCH MAY BE GROUNDED - CHECK
LONG 1, SHORT 5	NOT ENABLED FOR LINCOLN PRODUCTS	
LONG 2, SHORT 1	0 RPM IS DETECTED AND 12V IS DETECTED FROM "L" TERMINAL ON ALTERNATOR	FAULTY RPM SENSOR - CHECK FOR GOOD CONNECTION
		FAULTY ECU - CHECK FOR 12 VOLTS ON SUPPLY LEAD TO RPM SENSOR FROM ECU
LONG 2, SHORT 2	CURRENT TO ACTUATOR IS OUT OF LIMIT	FAULTY ACTUATOR - CHECK FOR PROPER COIL RESISTANCE
		LEADS TO ACTUATOR MAY BE OPEN OR GROUNDED - CHECK
LONG 2, SHORT3	NOT ENABLED FOR LINCOLN PRODUCTS	
LONG 2, SHORT4	-50C WATER TEMPERATURE DETECTED	FAULTY WATER TEMPERATURE SENSOR - CHECK FOR PROPER RESISTANCE
		LEAD TO WATER TEMPERATURE SENSOR MAY BE OPEN - CHECK FOR CONTINUITY
LONG 2, SHORT 5	150C WATER TEMPERATURE DETECTED	FAULTY WATER TEMPERATURE SENSOR - CHECK FOR PROPER RESISTANCE
		LEAD TO WATER TEMPERATURE SENSOR MAY BE GROUNDED - CHECK
LONG 2, SHORT 6	0 VOLTS DETECTED FROM "L" TERMINAL ON ALTERNATOR FOR 1 SECOND	LEAD TO "L" TERMINAL ON ALTERNATOR MAY BE OPEN - CHECK FOR CONTINUITY
		BROKEN OR LOOSE BELT - INSPECT
		FAULTY ALTERNATOR - CHECK
LONG 2, SHORT 7	OVER 18 VOLTS DETECTED FROM ALTERNATOR	INCORRECT BATTERY - INSPECT
		FAULTY ALTERNATOR - CHECK
LONG 2, SHORT 8	LESS THAN 4 VOLTS TO RPM SENSOR AND/OR ACTUATOR SENSED BY ECU	FAULTY ECU - CHECK FOR 12 VOLTS ON LEADS TO RPM SENSOR AND ACTUATOR FROM ECU

PROPRIETARY & CONFIDENTIAL: THIS DOCUMENT CONTAINS PROPRIETARY INFORMATION OWNED BY LINCOLN GLOBAL, INC. AND MAY NOT BE DUPLICATED, COMMUNICATED TO OTHER PARTIES OR USED FOR ANY PURPOSE WITHOUT THE EXPRESS WRITTEN PERMISSION OF LINCOLN GLOBAL, INC.

MANUFACTURING TOLERANCE PER E2056 UNLESS OTHERWISE SPECIFIED TOLERANCE ON 2 PLACE DECIMALS IS ± .02 in. (±0.5 mm) ON 3 PLACE DECIMALS IS ± .002 in. (±0.05 mm) ON ALL ANGLES IS ± .5 OF A DEGREE MATERIAL TOLERANCE ("t") TO AGREE WITH PUBLISHED STANDARDS.

DO NOT SCALE THIS DRAWING

CONTROL: CLEVELAND | DRAWN BY: Maglietta | ENGINEER: D. BENDER | APPROVED: -

SCALE: NONE IF PRINTED @ A2 SIZE | UNITS: INCH

EQUIPMENT TYPE: CLASSIC 300D KUBOTA

SUBJECT: MACHINE SCHEMATIC

MATERIAL DISPOSITION: NA | APPROVAL DATE: 11/16/2007 | PROJECT NUMBER: CRM37569 | REFERENCE: L13097

PAGE 1 OF 1

DOCUMENT NUMBER: L13351 | DOCUMENT REVISION: A

NOTE: This diagram is for reference only. It may not be accurate for all machines covered by this manual.

Return to Section TOC
Return to Master TOC
Return to Section TOC
Return to Master TOC
Return to Section TOC
Return to Master TOC

WIRE FEED MODULE - WIRING DIAGRAM

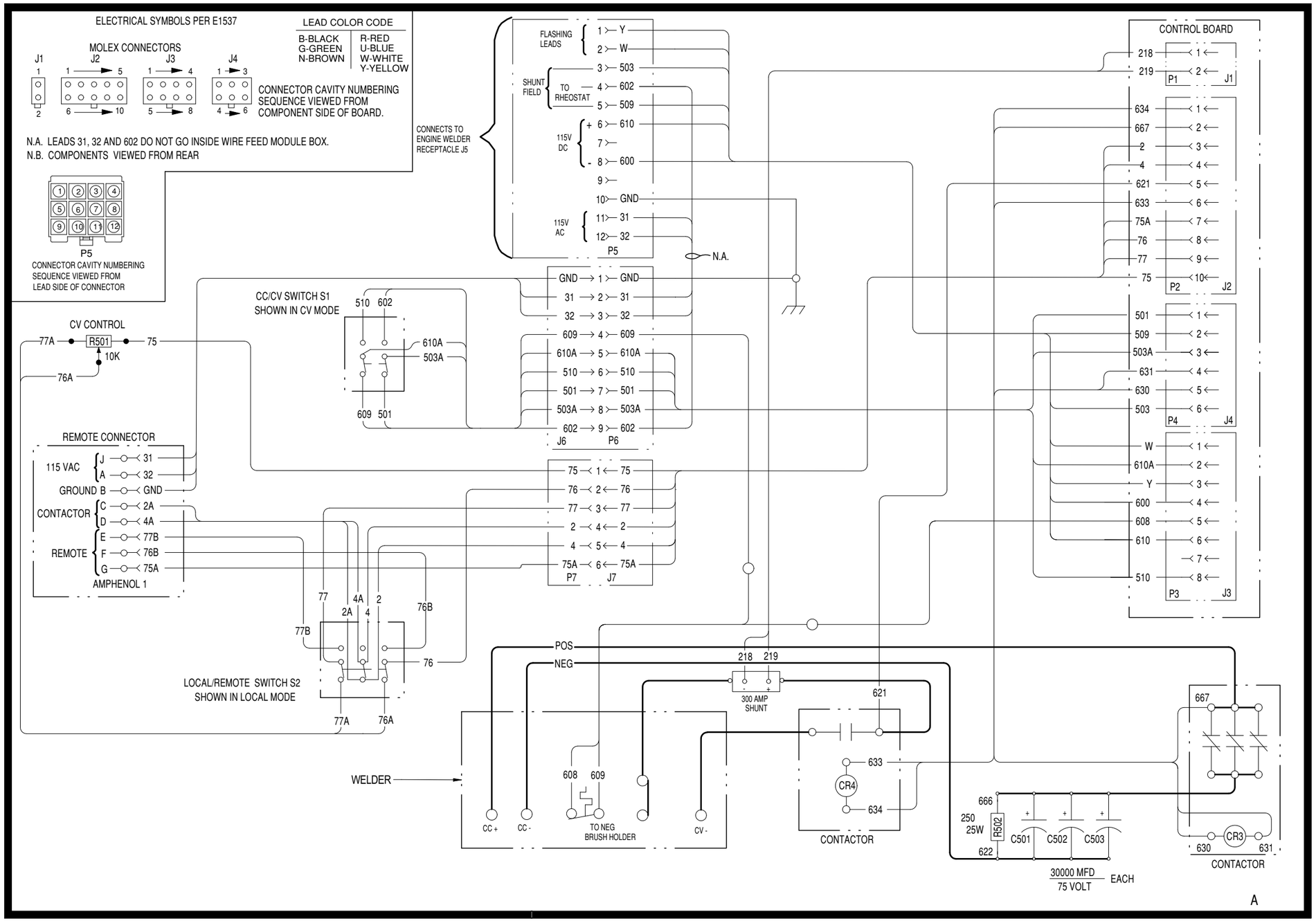

L9259

NOTE: This diagram is for reference only. It may not be accurate for all machines covered by this manual. The wiring diagram specific to your code is pasted inside one of the enclosure panels of your machine.

Return to Section TOC Return to Master TOC

SCHEMATIC - WIRE FEED MODULE OPTION - (G2562)

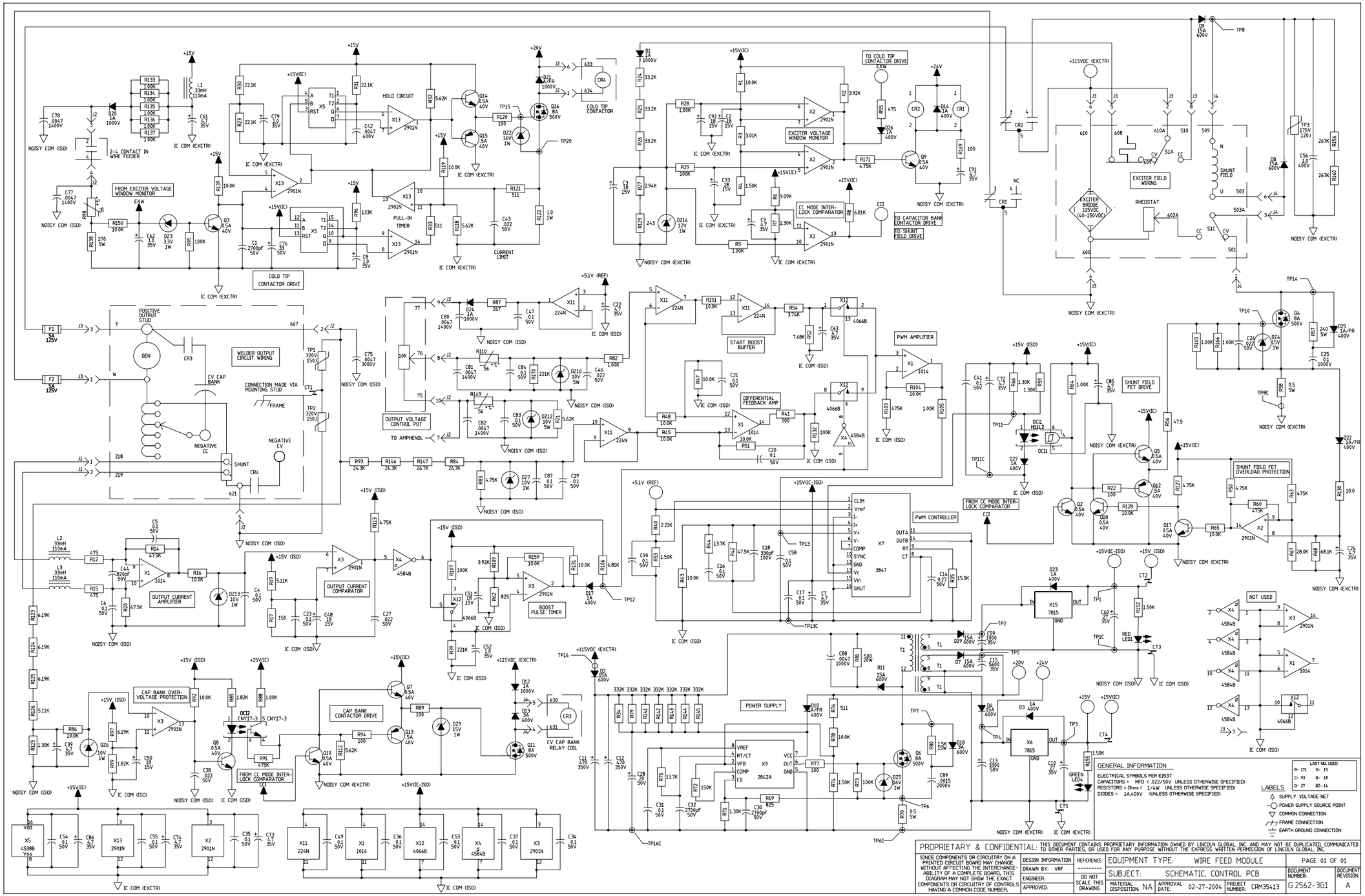

NOTE: This diagram is for reference only. It may not be accurate for all machines covered by this manual.

Return to Section TOC
Return to Master TOC
Return to Section TOC
Return to Master TOC
Return to Section TOC
Return to Master TOC

SCHEMATIC - IDLER (CODES 10545, 10546, 10657, 10658, 10911, 10927) - (L10826)

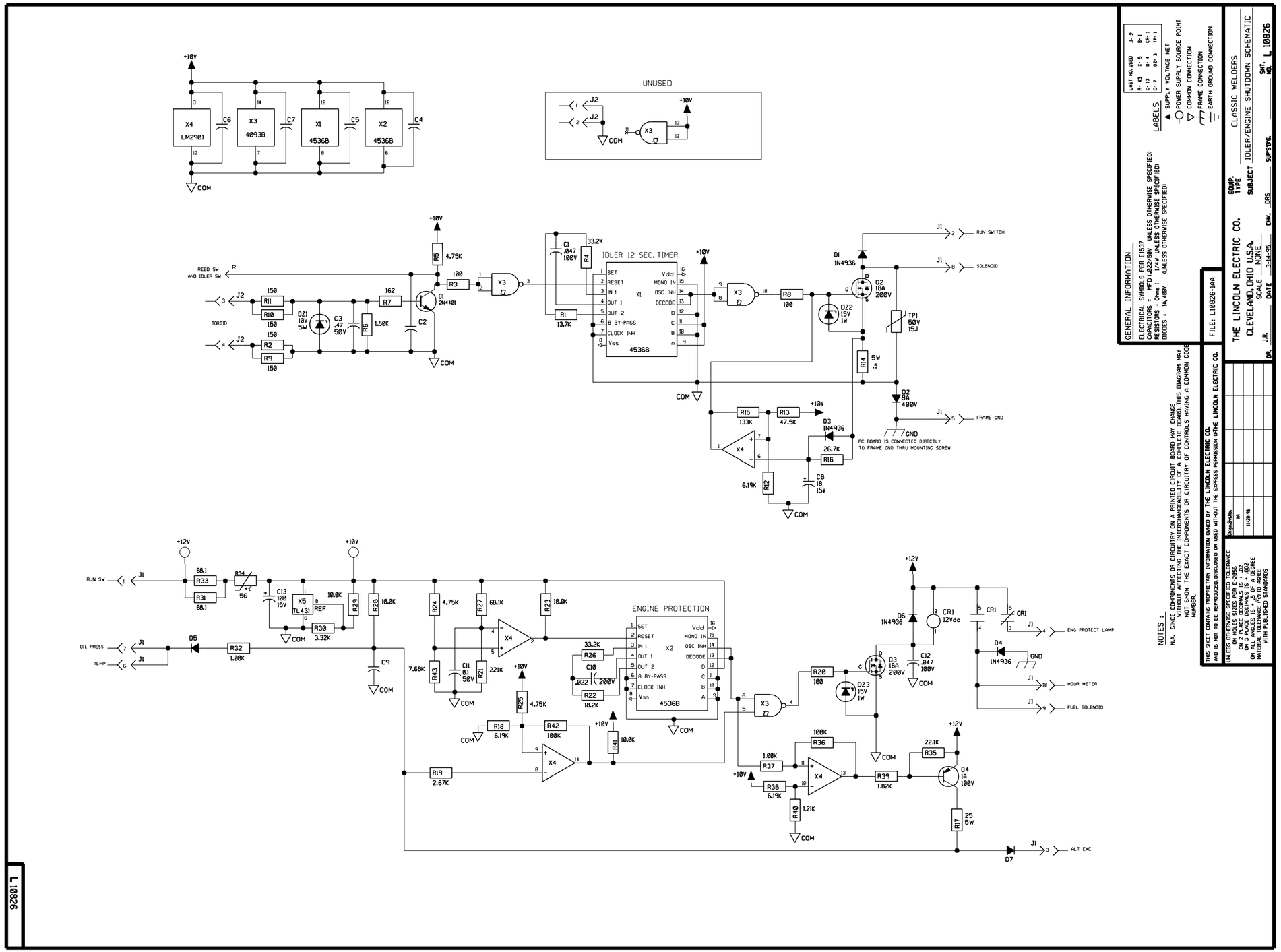

NOTE: This diagram is for reference only. It may not be accurate for all machines covered by this manual.

SCHEMATIC - IDLER (CODES 11110 THRU 11475 PERKINS ENGINE ONLY) - (G4828)

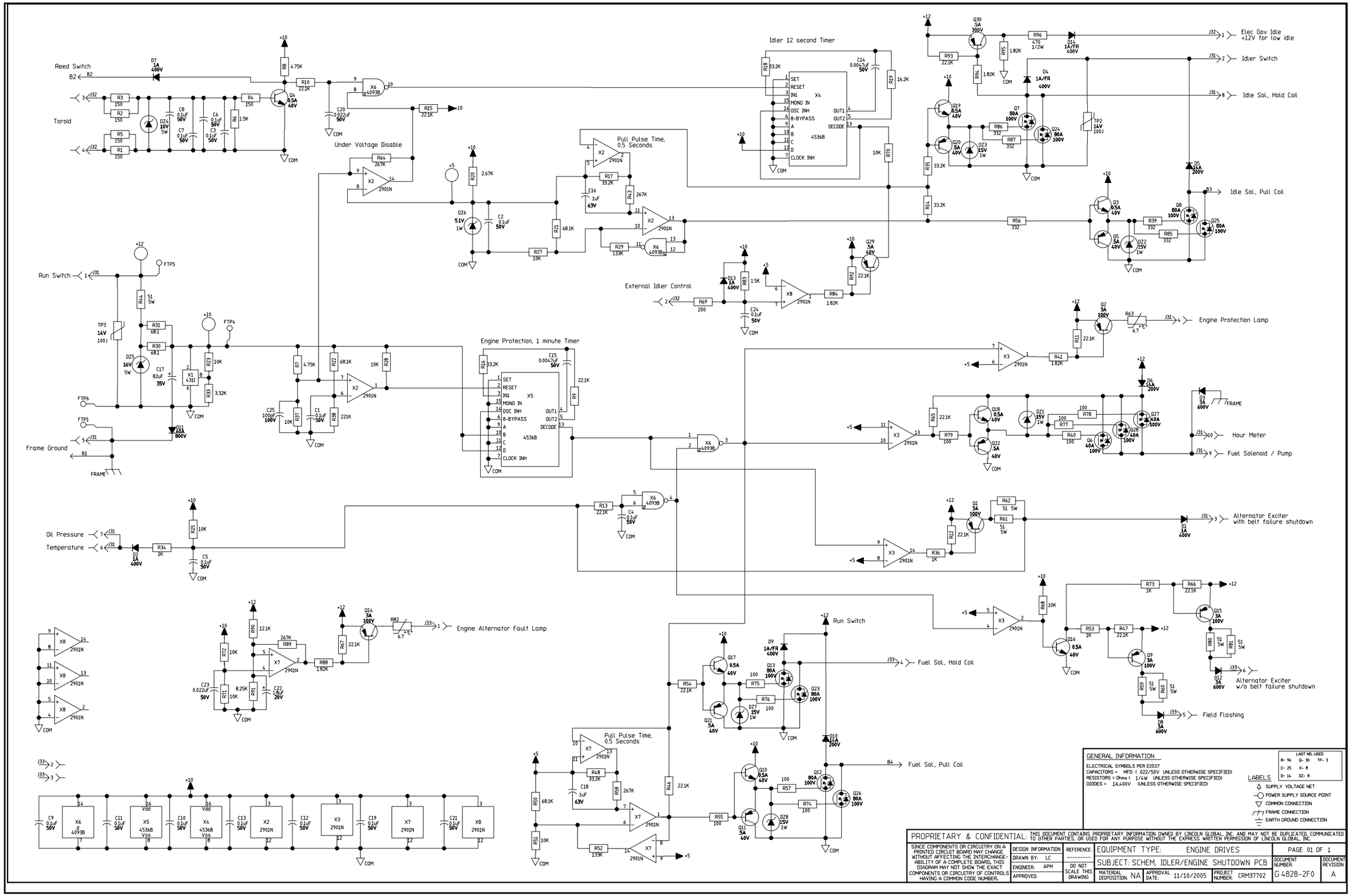

NOTE: This diagram is for reference only. It may not be accurate for all machines covered by this manual.

SCHEMATIC - CURRENT SENSOR PC BD (KUBOTA ENGINE ONLY) - (S25973)

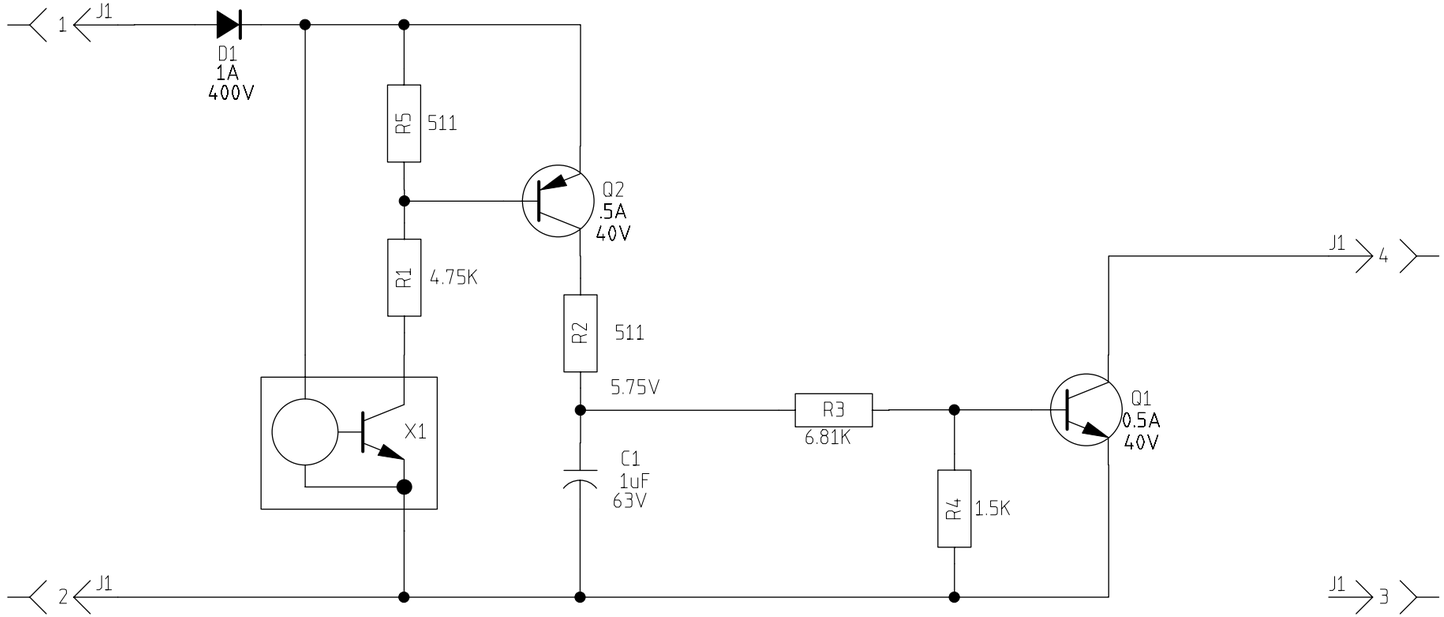

GENERAL INFORMATION

ELECTRICAL SYMBOLS PER E1537
CAPACITORS = MFD (.022/50V UNLESS OTHERWISE SPECIFIED)
RESISTORS = Ohms (1/4W UNLESS OTHERWISE SPECIFIED)
DIODES = 1A,400V (UNLESS OTHERWISE SPECIFIED)

LAST NO. USED	
R- 5	Q- 2
C- 1	X- 1
D- 1	

LABELS

- SUPPLY VOLTAGE NET
- POWER SUPPLY SOURCE POINT
- COMMON CONNECTION
- FRAME CONNECTION
- EARTH GROUND CONNECTION

PROPRIETARY & CONFIDENTIAL: THIS DOCUMENT CONTAINS PROPRIETARY INFORMATION OWNED BY LINCOLN GLOBAL, INC. AND MAY NOT BE DUPLICATED, COMMUNICATED TO OTHER PARTIES, OR USED FOR ANY PURPOSE WITHOUT THE EXPRESS WRITTEN PERMISSION OF LINCOLN GLOBAL, INC.

SINCE COMPONENTS OR CIRCUITRY ON A PRINTED CIRCUIT BOARD MAY CHANGE WITHOUT AFFECTING THE INTERCHANGE-ABILITY OF A COMPLETE BOARD, THIS DIAGRAM MAY NOT SHOW THE EXACT COMPONENTS OR CIRCUITRY OF CONTROLS HAVING A COMMON CODE NUMBER.	DESIGN INFORMATION DRAWN BY: FM ENGINEER: RR APPROVED:	REFERENCE: --- DO NOT SCALE THIS DRAWING	EQUIPMENT TYPE: ENGINE WELDERS SUBJECT: SCHEM, AC/DC CURRENT SENSOR PCB MATERIAL DISPOSITION: NA APPROVAL DATE: 8/24/2004 PROJECT NUMBER: CRM34899	PAGE 01 OF 1 DOCUMENT NUMBER: S 25973-1D0	DOCUMENT REVISION: A

NOTE: This diagram is for reference only. It may not be accurate for all machines covered by this manual.